Protected by copyright. Copyright by Volkswagen AG. Volkswagen AG does not guarantee or accept any liability with respect to the correctness of information in this document. Copyright by Volkswagen AG. Protected by copyright. Copying for private or commercial purposes, in part or in whole, is not permitted unless authorised by Volkswagen AG.

Polo 1995 ➤

4-Cyl. injection engine (2 valve, roller rocker finger), Mechanics

Engine ID	AKK	AKP	ALD	AUC	AUD				

Edition 10.1999

satelettronica

List of Workshop Manual Repair GroupsList of Workshop Manual Repair GroupsList of Workshop Manual Repair Groups

Polo 1995 ➤

4-Cyl. injection engine (2 valve, roller rocker finger), Mechanics

Protected by copyright. Copying for private or commercial purposes, in part or in whole, is not permitted unless authorised by Volkswagen AG. Volkswagen AG does not guarantee or accept any liability with respect to the correctness of information in this document. Copyright by Volkswagen AG.

satelettronica

Repair Group

00 - Technical data
10 - Removing and installing engine
13 - Crankshaft group
15 - Cylinder head, Valve gear
17 - Lubrication
19 - Cooling system
20 - Fuel supply system
26 - Exhaust system

Technical information should always be available to the foremen and mechanics, because their careful and constant adherence to the instructions is essential to ensure vehicle road-worthiness and safety. In addition, the normal basic safety precautions for working on motor vehicles must, as a matter of course, be observed.

All rights reserved.
No reproduction without prior agreement from publisher.

Copyright © 2010 Volkswagen AG, Wolfsburg

Contents

00 - Technical data 1
1 Technical data 1
1.1 Technical data 1
1.2 Engine number 1
1.3 Engine data 1

10 - Removing and installing engine 3
1 Removing and installing engine 3
1.1 Removing and installing engine 3
1.2 Notes on removing 4
1.3 Securing engine to assembly stand 8
1.4 Notes on installing 8
1.5 Tightening torques 10
1.6 Assembly mounting 10
1.7 Additional information and removal instructions for vehicles with air conditioner 12

13 - Crankshaft group 13
1 Dismantling and assembling engine 13
1.1 Dismantling and assembling engine 13
1.2 Removing and installing ribbed belt 20
1.3 Checking semi-automatic toothed belt tensioning roller 23
2 Removing and installing cylinder block, sealing flange and flywheel/drive plate 25
2.1 Removing and installing cylinder block, sealing flange and flywheel/drive plate 25
2.2 Aluminium cylinder block 26
2.3 Renewing crankshaft oil seal -belt pulley end 29
2.4 Removing and installing drive plate 31
2.5 Renewing crankshaft sealing flange -flywheel end- 34
2.6 Crankshaft dimensions 43
3 Dismantling and assembling pistons and conrods 44
3.1 Dismantling and assembling pistons and conrods 44
3.2 Piston and cylinder dimensions 49

15 - Cylinder head, Valve gear 51
1 Removing and installing cylinder head 51
1.1 Removing and installing cylinder head 51
1.2 Removing, installing and tensioning toothed belts 56
1.3 Removing and installing cylinder head 59
1.4 Checking compression pressures 63
2 Servicing valve gear 65
2.1 Servicing valve gear 65
2.2 Reworking valve seats 71
2.3 Replacing camshaft oil seal 73
2.4 Removing and installing cylinder head cover and camshaft 75
2.5 Checking valve guides 78
2.6 Renewing valve stem seals 80

17 - Lubrication 83
1 Removing and installing parts of the lubrication system 83
1.1 Removing and installing parts of the lubrication system 83
1.2 Removing and installing oil sump 88
1.3 Removing and installing oil pump 90
1.4 Checking oil pressure and oil pressure switch 93

19 - Cooling system 96

Protected by copyright. Copyright by Volkswagen AG. Volkswagen AG does not guarantee or accept any liability with respect to the correctness of information in this document. Copyright by Volkswagen AG. Volkswagen AG does not guarantee or accept any liability with respect to the correctness of information in this document. Copyright by Volkswagen AG.
satelettronica

1 Removing and installing parts of cooling system . . . 96
1.1 Removing and installing parts of cooling system . . . 96
1.2 Parts of cooling system body side . . . 97
1.3 Parts of cooling system engine side . . . 100
1.4 Coolant hose connection diagram . . . 104
1.5 Draining and filling cooling system . . . 105
1.6 Removing and installing radiator . . . 107

20 - Fuel supply system . . . 109
1 Removing and installing parts of fuel supply system . . . 109
1.1 Removing and installing parts of fuel supply system . . . 109
1.2 Removing and installing fuel tank with its attachments and fuel filter . . . 110
1.3 Safety precautions when working on the fuel supply system . . . 115
1.4 Rules for cleanliness . . . 116
1.5 Crash fuel shut-off . . . 116
1.6 Removing and installing fuel delivery unit . . . 116
1.7 Removing and installing fuel gauge sender . . . 117
1.8 Removing and installing fuel tank . . . 118
1.9 Checking fuel pump . . . 119
2 Electronic power control (EPC) . . . 125
2.1 Electronic power control (EPC) . . . 125
2.2 Function of EPC system . . . 125
2.3 Servicing parts of electronic power control (EPC) . . . 127
2.4 Checking electronic accelerator warning lamp . . . 128
2.5 Checking accelerator pedal position sender . . . 130
3 Activated charcoal filter system . . . 133
3.1 Activated charcoal filter system . . . 133
3.2 Function . . . 133
3.3 Servicing parts of the activated charcoal filter system . . . 134
3.4 Checking tank venting valve . . . 135
3.5 Checking fuel tank breather . . . 137

26 - Exhaust system . . . 140
1 Removing and installing parts of exhaust system . . . 140
1.1 Removing and installing parts of exhaust system . . . 140
1.2 Exhaust manifold, front exhaust pipe and catalyst with attachments . . . 141
1.3 Silencer with mountings . . . 145
1.4 Checking catalyst . . . 147
2 Exhaust gas recirculation system . . . 150
2.1 Exhaust gas recirculation system . . . 150
2.2 Servicing parts of exhaust gas recirculation system . . . 151
2.3 Checking potentiometer for exhaust gas recirculation (G212) . . . 153

Protected by copyright. Copyright by Volkswagen AG. Volkswagen AG does not guarantee or accept any liability with respect to the correctness of information in this document. Copyright by Volkswagen AG. Reproduction, in part or whole, is not permitted unless authorised by Volkswagen AG for commercial purposes, in part or whole, is not permitted unless authorised by Volkswagen AG.
satelettronica

00 - Technical data

Volkswagen AG. Volkswagen AG does not guarantee or accept any liability with respect to the correctness of information in this document. Copyright by Volkswagen AG.
Protected by copyright. Copying for private or commercial purposes, in part or in whole, is not permitted unless authorised by Volkswagen AG.

1 - Technical data

1.1 - Technical data

1.2 - Engine number

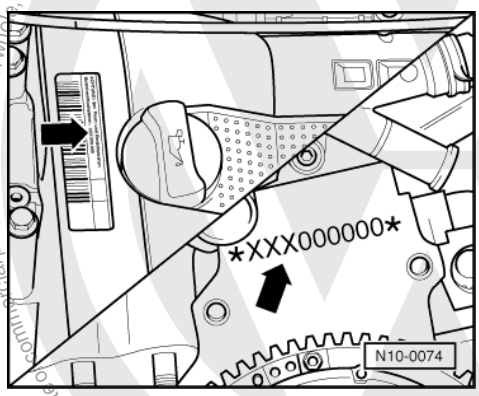

-> The engine number ("Code letters" and "Serial number") can be found on the front of the cylinder block at the gearbox end below the thermostat housing.

Additionally there is a sticker on the toothed belt guard with "Engine code" and "Serial number".

The engine code is also included on the vehicle data plate.

1.3 - Engine data

Code		AKK	ALD	AUC	AUD, AKP1)
Manufactured		08.99 ▸	08.99 ▸	08.99 ▸	08.99 ▸
Exhaust emissions fulfil		MVEG II standard ECE standard2)	MVEG II standard	EU4 standard	EU4 standard
Displacement	cm3	1390	999	999	1390
Output	kW at rpm	44/4700	37/5000	37/5000	44(401))/5000
Torque	Nm at rpm	116/3000	86/3000...3600	86/3000...3600	116/3000
Bore	ø mm	76.5	67.1	67.1	76.5
Stroke	mm	75.6	70.6	70.6	75.6

Code		AKK	ALD	AUC	AUD, AKP1)
Compression ratio		10.4	10.5	10.5	10.4
RON	at least	95 unleaded3)	95 unleaded3)	95 unleaded3)	95 unleaded3)
Injection, ignition		Motronic ME 7.5.10	Motronic ME 7.5.10	Motronic ME 7.5.10	Motronic ME 7.5.10
Knock control		yes	yes	yes	yes
Self-diagnosis		yes	yes	yes	yes

satelettronica

Code	AKK	ALD	AUC	AUD, AKP1)
Lambda regulation	1 Lambda probe	1 Lambda probe	2 Lambda probes	2 Lambda probes
Catalyst	yes2)	yes	yes4)	yes4)
Exhaust gas recirculation	no	no	yes	no
Charging	no	no	no	no

1) Austria: Reduction in output due to plate in front of exhaust pipe with catalyst

2) ECE standard =uncoated catalytic converter, lead resistant Lambda probe, leaded fuel possible

3) In exceptional circumstances min. 91 RON, however with reduced performance

4) Additionally with integrated pre-catalyst in exhaust manifold

Protected by copyright. Copying for private or commercial purposes, in part or in whole, is not permitted unless authorised by Volkswagen AG. Volkswagen AG does not guarantee or accept any liability with respect to the correctness of information in this document. Copyright by Volkswagen AG.
satelettronica

10 - Removing and installing engine

1 - Removing and installing engine

1.1 - Removing and installing engine

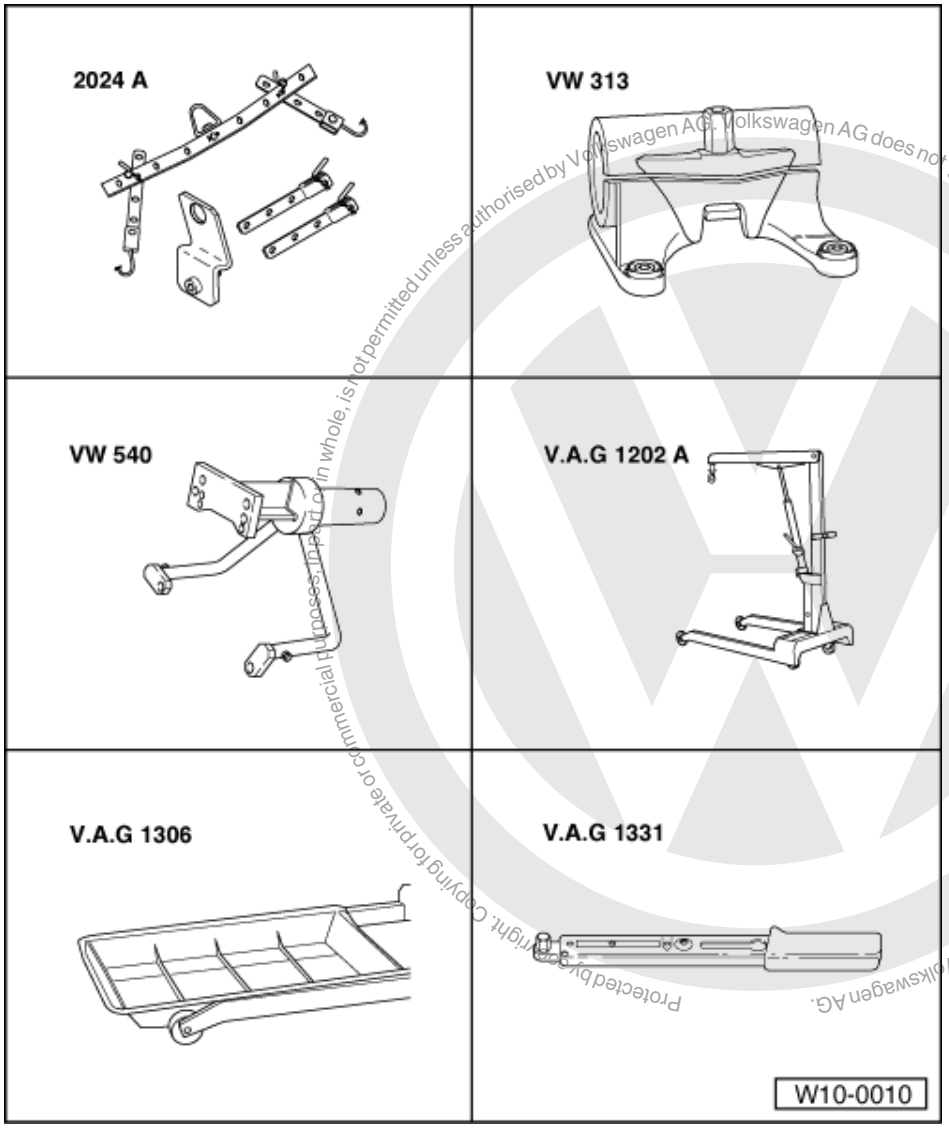

Protected by copyright. Copying for private or commercial purposes, in part or in whole, is not permitted unless authorised by Volkswagen AG. Volkswagen AG does not guarantee or accept any liability with respect to the correctness of information in this document. Copyright by Volkswagen AG.
satelettronica

Special tools, workshop equipment, test and measuring appliances and auxiliary items required

- 2024 A Lifting tackle
- VW 313 Support clamp
- VW 540 Engine and gearbox support
- V.A.G 1202 A Workshop crane
- V.A.G 1306 Drip tray
- V.A.G 1331 Torque wrench (5...50 Nm)

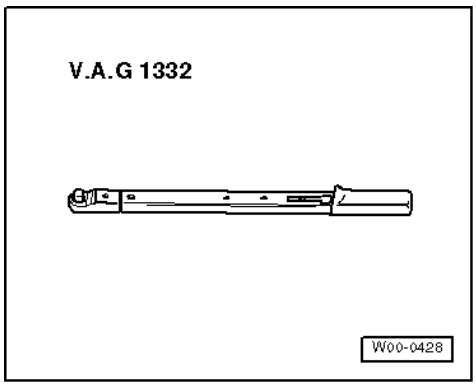

- -> V.A.G 1332 Torque wrench (40...200 Nm)

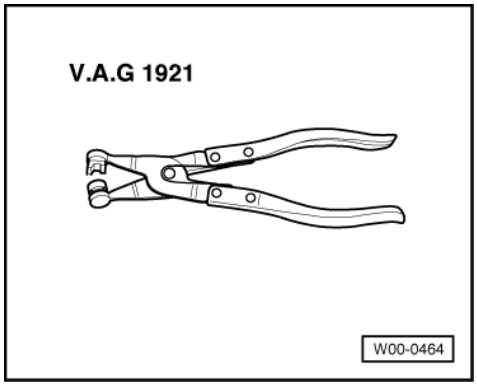

- -> V.A.G 1921 Pliers for spring-type clips or VAS 5024 assembly tool for spring-type clips
- G 000 100 grease (vehicles with manual gearbox)
- Cable tie

1.2 - Notes on removing

Note:

Check whether a coded radio is installed as during the forthcoming work sequences the battery earth strap must be disconnected. Obtain radio code first if necessary.

- The engine is removed forwards together with the gearbox.
- With ignition switched off disconnect battery earth strap.
- All cable ties which are opened or cut open when removing engine, must be replaced in the same position when installing engine.
- Remove air cleaner:

=> Repair group 24; Servicing injection; Dismantling and assembling air cleaner Servicing injection Dismantling and assembling air cleaner

- Remove battery and battery retainer.
- Open and close the expansion tank sealing cap to release pressure in cooling system.
- Disconnect all electric wires from gearbox, alternator and starter and move clear.

- Loosen or separate the following components:
  - The hose from intake manifold to activated charcoal filter system
  - The vacuum hose from inlet manifold at brake servo
  - The connector from coolant temperature sender and oil pressure switch
  - The collective connectors below the thermostat housing
  - The ignition transformer and Hall sender connectors
  - The engine speed sender connector
  - Lambda probe connector in exhaust manifold
  - The 2-pin connector from knock sensor (rear of cylinder block)
  - The road speed sender connector

Protected by copyright. Copying or distribution is not permitted unless authorised by Volkswagen AG. Volkswagen AG does not guarantee or accept any liability with respect to the correctness of information in this document. Copyright by Volkswagen AG.
satelettronica

- The reversing light connector

Warning!
Fuel supply lines are under pressure! Before removing from hose connection wrap a cloth around the connection. Then release pressure by carefully pulling hose off connection.

- Now separate fuel supply as well as fuel return pipes at connecting point on suspension strut turret.
- Pull off/disconnect all other electrical connections as necessary from engine and lay to one side.
- Separate front exhaust pipe from exhaust manifold => Page 141 , exhaust manifold, front exhaust pipe and catalyst with attachments.

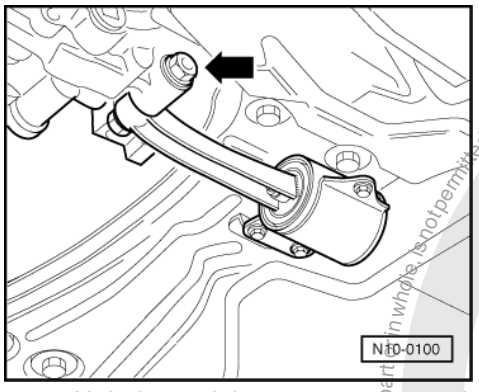

- -> Unbolt pendulum support at gearbox housing.

Vehicles with manual gearbox

- Disconnect clutch cable:

=> Repair group 30; Servicing hydraulic clutch control Servicing hydraulic clutch control

- Disconnect selector mechanism from gearbox.

=> Repair group 34; Servicing gear change mechanism Servicing gear change mechanism

Vehicles with automatic gearbox

- Remove selector lever cable from gearbox:

=> Repair group 37; Servicing selector mechanism; Dismantling and assembling selector mechanism Servicing selector mechanism Dismantling and assembling selector mechanism

Continuation for all vehicles

- Drain coolant => Page 105 .
- Loosen hose clips and pull coolant hoses off coolant thermostat housing.
- Loosen belt pulley securing bolts from power steering vane pump.
- Remove ribbed belt => Page 20 .
- Unbolt power steering vane pump and secure to sub-frame with wire; hoses remain connected:

=> Running gear, axles, steering; Repair group 48; Assembly overview: vane pump, reservoir, hydraulic lines; Removing and installing power steering vane pump. Assembly overview: vane pump, reservoir, hydraulic lines Removing and installing power steering vane pump.

- Remove securing clamps for power steering pressure pipe.

Vehicles with air conditioner

- Removing air conditioner compressor:
- Observe additional information and removal instructions =>Page 12

Protected by copyright. Copying for private or commercial purposes, in part or in whole, is not permitted unless authorised by Volkswagen AG. Volkswagen AG does not guarantee or accept any liability with respect to the correctness of information in this document. Copyright by Volkswagen AG.
satelettronica

Continuation for all vehicles

- Remove left and right-hand drive shaft on gearbox and tie up:

=> Running gear, axles, steering; Repair group 40; Servicing front suspension; Removing and installing drive shafts Servicing front suspension Removing and installing drive shafts

- Removing lock carrier with attachments:

=> General body repairs exterior; Repair group 50; Body front; Assembly overview Body front Assembly overview

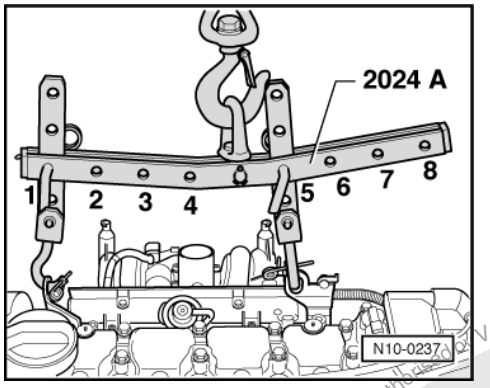

Vehicles with manual gearbox

- -> Attach lifting tackle 2024 A as follows and lift slightly with workshop crane:

  Pulley end:
  2nd hole in hook at position 1

  Flywheel end:
  2nd hole in hook at position 5

Warning! The hooks and locating pins must be secured with locking pins.

Notes:

- The positions marked 1...4 on the bar must be towards the pulley end.
- The holes in the hook rails are counted up from the hook.

Vehicles with automatic gearbox

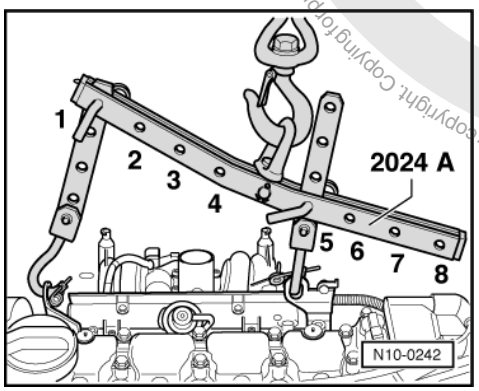

- -> Attach lifting tackle 2024 A as follows and lift slightly with workshop crane:

Protected by copyright. Copying for private or commercial purposes, in part or in whole, is not permitted unless authorised by Volkswagen AG. Volkswagen AG does not guarantee or accept any liability with respect to the correctness of information in this document. Copyright by Volkswagen AG.
satelettronica

Pulley end:
4th hole in hook at position 1

Flywheel end:
1st hole in hook at position 5

Warning!
The hooks and locating pins must be secured with locking pins.

Notes:

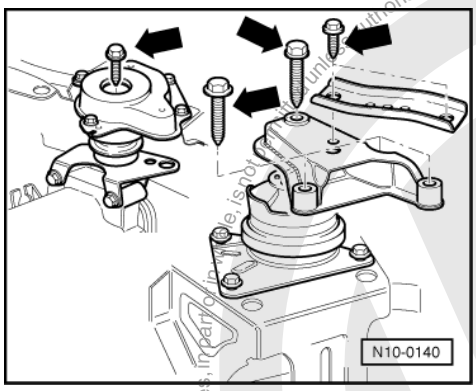

- The positions marked 1...4 on the bar must be towards the pulley end.
- The holes in the hook rails are counted up from the hook.

Vehicles with manual gearbox

- -> Unbolt assembly at gearbox and engine mountings -arrows-.

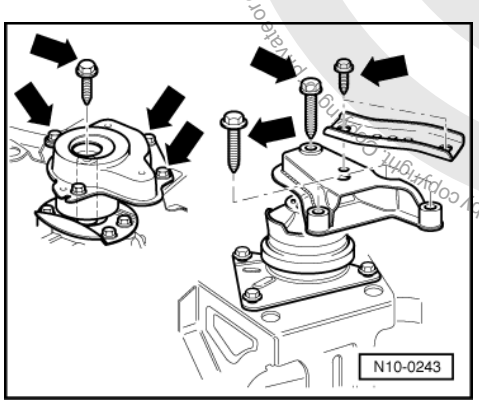

Vehicles with automatic gearbox

- -> Unbolt assembly at gearbox and engine mountings -arrows-.
- Remove gearbox mounting -arrows-.

Continuation for all vehicles

- Lower assembly until it is released from the gearbox mounting.
- Pull assembly out forwards. When doing this, if necessary turn assembly and lower slightly.

Note:

When the assembly is lifted off, it must be carefully guided to prevent damage to the bodywork.

Protected by copyright. Copying for private or commercial purposes, in part or in whole, is not permitted unless authorised by Volkswagen AG. Volkswagen AG does not guarantee or accept any liability with respect to the correctness of information in this document. Copyright by Volkswagen AG.
satelettronica

1.3 - Securing engine to assembly stand

When working on the engine, it should be secured to the assembly stand support clamp VW 313 using the engine and gearbox box support VW 540.

Work sequence

- Remove gearbox.

Vehicles with automatic gearbox

- Secure torque converter against "falling out" after separating engine from gearbox.

Continuation for all vehicles

- Secure engine to support clamp VW 313 using engine and gearbox support VW 540.

1.4 - Notes on installing

Installation is carried out in the reverse sequence, when doing this note the following:

Vehicles with manual gearbox

- Check clutch release bearing for wear, renew if necessary.
- Lightly grease clutch release bearing, release bearing guide sleeve and splines on input shaft with G 000 100.

Vehicles with automatic gearbox

- Only use nuts approved in parts programme to secure torque converter to drive plate.

Continuation for all vehicles

- Check whether the dowel sleeves for centralising engine/gearbox are in the cylinder block, install if necessary.
- When swinging the assembly in, ensure that clearance exists between the drive shafts.

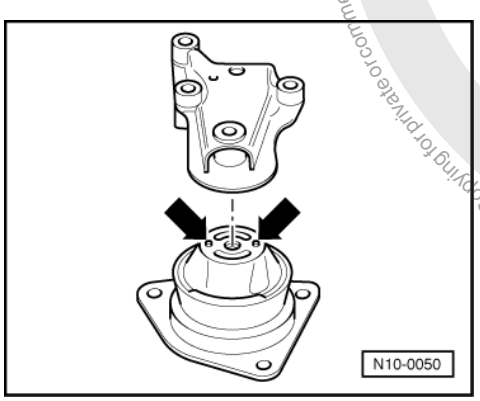

- -> When installing the engine mounting ensure that the pins on the bonded rubber mounting engage in the engine support bracket -arrows-.
- Align engine mountings stress-free by rocking.

Note:

Assembly mounting tightening torques

Protected by copyright. Copying for private or commercial purposes, in part or in whole, is not permitted unless authorised by Volkswagen AG. Volkswagen AG does not guarantee or accept any liability with respect to the correctness of information in this document. Copyright by Volkswagen AG.
satelettronica

=> *Page 10* .

- Install drive shafts:

=> Running gear, axles, steering; Repair group 40; Servicing front suspension; Removing and installing drive shafts Servicing front suspension Removing and installing drive shafts

- Installing P.A.S. vane pump:

=> Running gear, axles, steering; Repair group 48; Assembly overview: vane pump, reservoir, hydraulic lines; Removing and installing power steering vane pump. Assembly overview: vane pump, reservoir, hydraulic lines Removing and installing power steering vane pump.

Vehicles with air conditioner

- Install air conditioner compressor.

Continuation for all vehicles

- Electrical connections and routing:

=> Electrical system; Repair group 97

- Install ribbed belt => Page 20 .

Vehicles with manual gearbox

- Installing clutch cable:

=> Repair group 30; Servicing hydraulic clutch control Servicing hydraulic clutch control

- Connecting selector mechanism to gearbox.

=> Repair group 34; Servicing gear change mechanism Servicing gear change mechanism

Vehicles with automatic gearbox

- Install selector cable on gearbox, adjust if necessary:

=> Repair group 37; Servicing selector mechanism; Dismantling and assembling selector mechanism Servicing selector mechanism Dismantling and assembling selector mechanism

Continuation for all vehicles

- Filling with coolant => Page 105
- Install air cleaner:

=> Repair group 24; Servicing injection system; Dismantling and assembling air cleaner. Servicing injection system Dismantling and assembling air cleaner.

- Perform the work sequence "Procedure after interrupting voltage supply".

=> Repair group 24; Engine control unit; Procedure after interrupting voltage supply. Engine control unit Procedure after interrupting voltage supply.

Note:

The readiness code is reset or erased each time fault memory is erased.

- Carry out a test drive and interrogate fault memory:

satelettronica
Protected by copyright. Copying for private or commercial purposes, in part or in whole, is not permitted unless authorised by Volkswagen AG. Volkswagen AG does not guarantee or accept any liability with respect to the correctness of information in this document. Copyright by Volkswagen AG.

=> Repair group 01; Fault memory; Interrogating and erasing fault memory of engine control unit Fault memory Interrogating and erasing fault memory of engine control unit

1.5 - Tightening torques

Bolted connection		Tightening torque
Bolts, nuts	M 6	10 Nm
	M 8	20 Nm
	M10	45 Nm
	M 12	60 Nm
in variation of this		
Exhaust pipe to manifold		40 Nm

1.6 - Assembly mounting

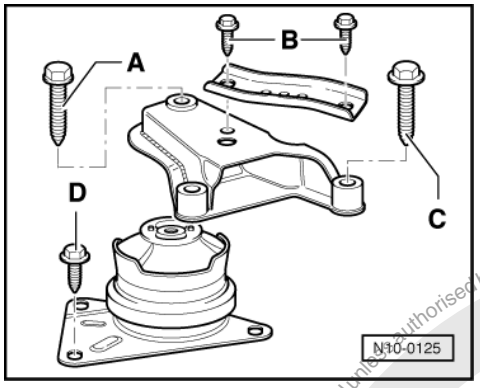

Tightening torques

Note:

The assembly mounting securing bolts are stretch bolts and must be replaced.

-> Engine mounting

A = 50 Nm
B = 25 Nm
C = 40 Nm + turn 90°(1/4 turn)further
D = 20 Nm + turn 90°(1/4 turn)further

Vehicles with manual gearbox

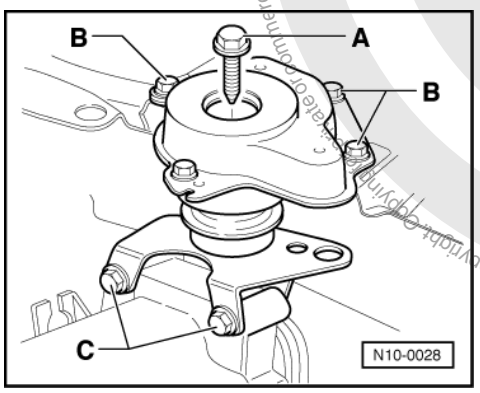

Protected by copyright. Copyright by Volkswagen AG.
Copyright by Volkswagen AG. Volkswagen AG does not guarantee or accept any liability with respect to the correctness of information in this document. Copying for private or commercial purposes, in part or in whole, is not permitted unless authorised by Volkswagen AG.
satelettronica

-> Gearbox mounting

A = 60 Nm + turn 90°(1/4 turn)further
B = 20 Nm + turn 90°(1/4 turn)further
C = 50 Nm

Vehicles with automatic gearbox

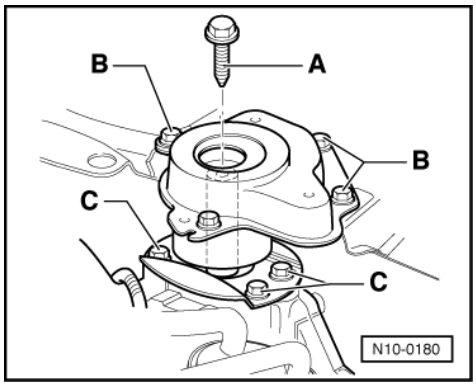

-> Gearbox mounting

A = 60 Nm + turn 90°(1/4 turn)further
B = 20 Nm + turn 90°(1/4 turn)further
C = 30 Nm

Vehicles with manual gearbox

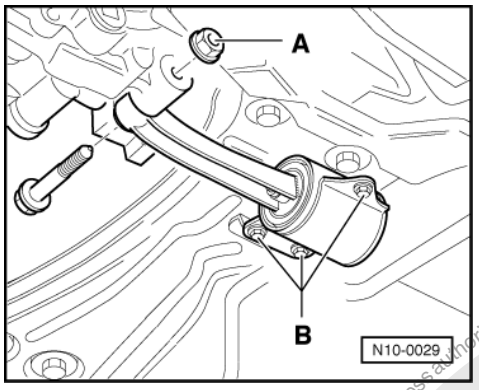

-> Pendulum support

A = 40 Nm + turn 90°(1/4 turn)further
B = 20 Nm + turn 90°(1/4 turn)further

Vehicles with automatic gearbox

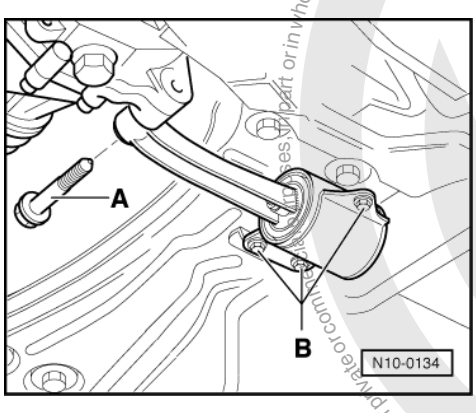

satelettronica
Protected by copyright. Copying for private or commercial purposes, in part or in whole, is not permitted unless authorised by Volkswagen AG. Volkswagen AG does not guarantee or accept any liability with respect to the correctness of information in this document. Copyright by Volkswagen AG

-> Pendulum support

A = 40 Nm + turn 90°(1/4 turn)further
B = 20 Nm + turn 90°(1/4 turn)further

1.7 - Additional information and removal instructions for vehicles with air conditioner

Warning!
The air conditioning system refrigerant circuit must not be opened.

Note:

To prevent damage to condenser and also to the refrigerant lines/hoses, ensure that the pipes and hoses are not stretched, kinked or bent.

To facilitate removing and installing the engine without opening the refrigerant circuit:

- Unbolt retaining clamp(s) for refrigerant lines.
- Remove ribbed belt => Page 20

- Remove lock carrier with attachments:

=> General body repairs exterior; Repair group 50; Body front; Removing and installing lock carrier with attachments Body front Removing and installing lock carrier with attachments

- Remove air conditioner compressor with attached refrigerant hoses from support:

=> Heating, air conditioner system; Repair group 87

- Set the lock carrier with radiator, condenser and air conditioner compressor to the side so that the refrigerant hoses and pipes -arrows- are not strained.

Protected by copyright. Copyright by Volkswagen AG. Volkswagen AG does not guarantee or accept any liability with respect to the correctness of information in this document. Copyright by Volkswagen AG. Reproduction, in whole or in part, is prohibited unless authorised by Volkswagen AG. Volkswagen AG does not guarantee or accept any liability with respect to the correctness of information in this document. Copyright by Volkswagen AG.
satelettronica

13 - Crankshaft group

1 - Dismantling and assembling engine

1.1 - Dismantling and assembling engine

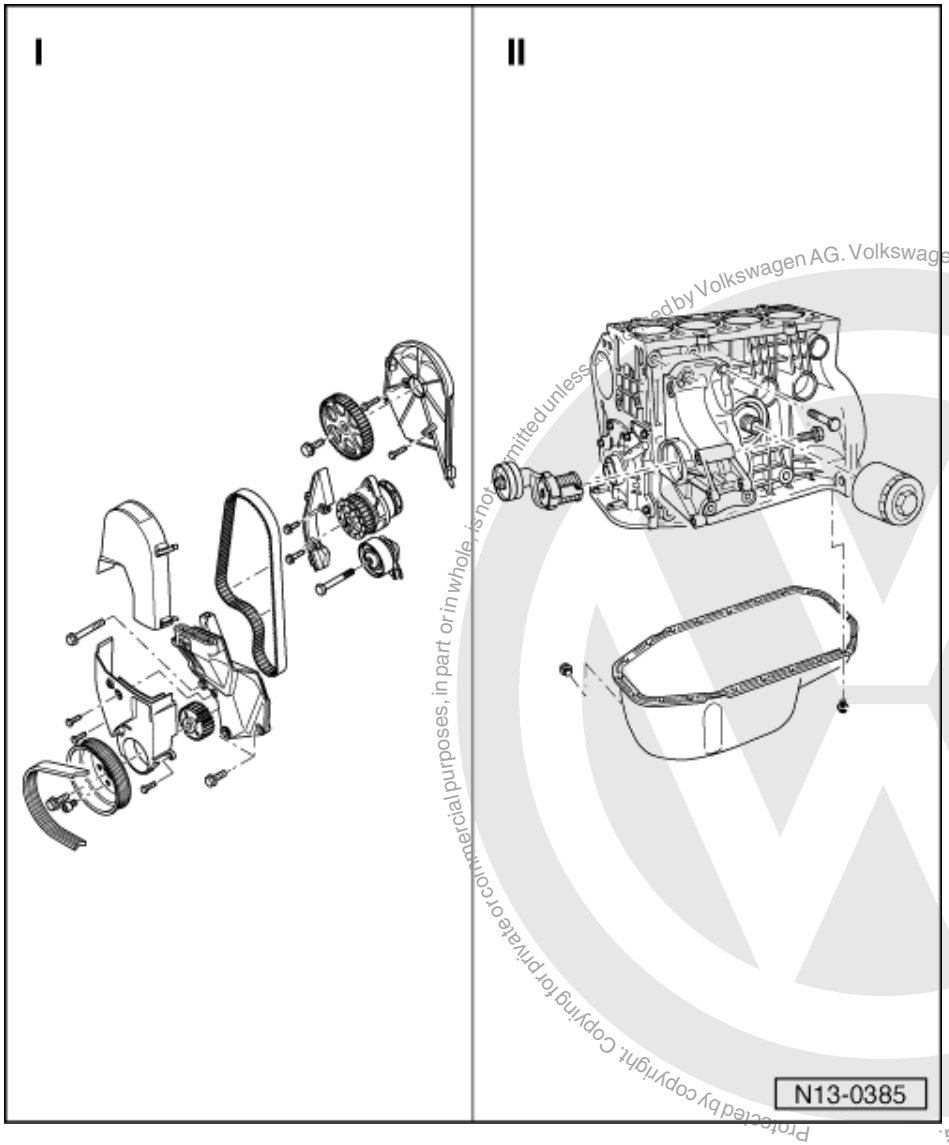

I =>Page 14

II =>Page 18

Protected by copyright. Copying for private or commercial purposes, in part or in whole, is not permitted unless authorised by Volkswagen AG. Volkswagen AG does not guarantee or accept any liability with respect to the correctness of information in this document. Copyright by Volkswagen AG.
satelettronica

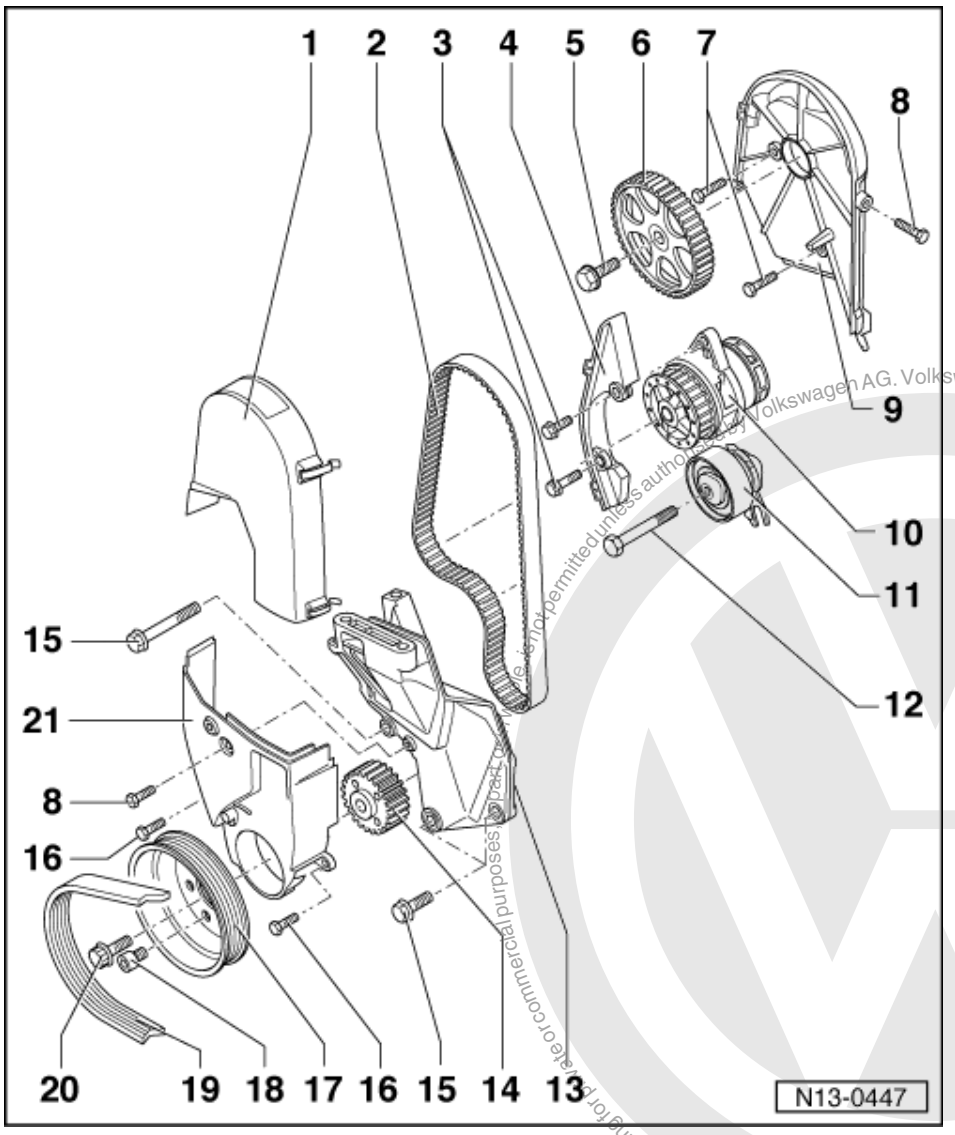

Part I

1 Toothed belt guard - upper part

2 Toothed belt
- Mark D.O.R. before removing
- Check for wear
- Do not kink
- Removing, installing and tensioning
  => Page 57

3 20 Nm

4 Toothed belt guard - coolant pump

5 20 Nm + 1/4 turn (90 °) further
- To loosen and tighten, hold with retainer 3036
- Renew

6 Camshaft sprocket
- Note position when installing the toothed belt
  => Page 57

Protected by copyright. Copying for private or commercial purposes, in part or in whole, is not permitted unless authorised by Volkswagen AG. Volkswagen AG does not guarantee or accept any liability with respect to the correctness of information in this document. Copyright by Volkswagen AG.
satelettronica

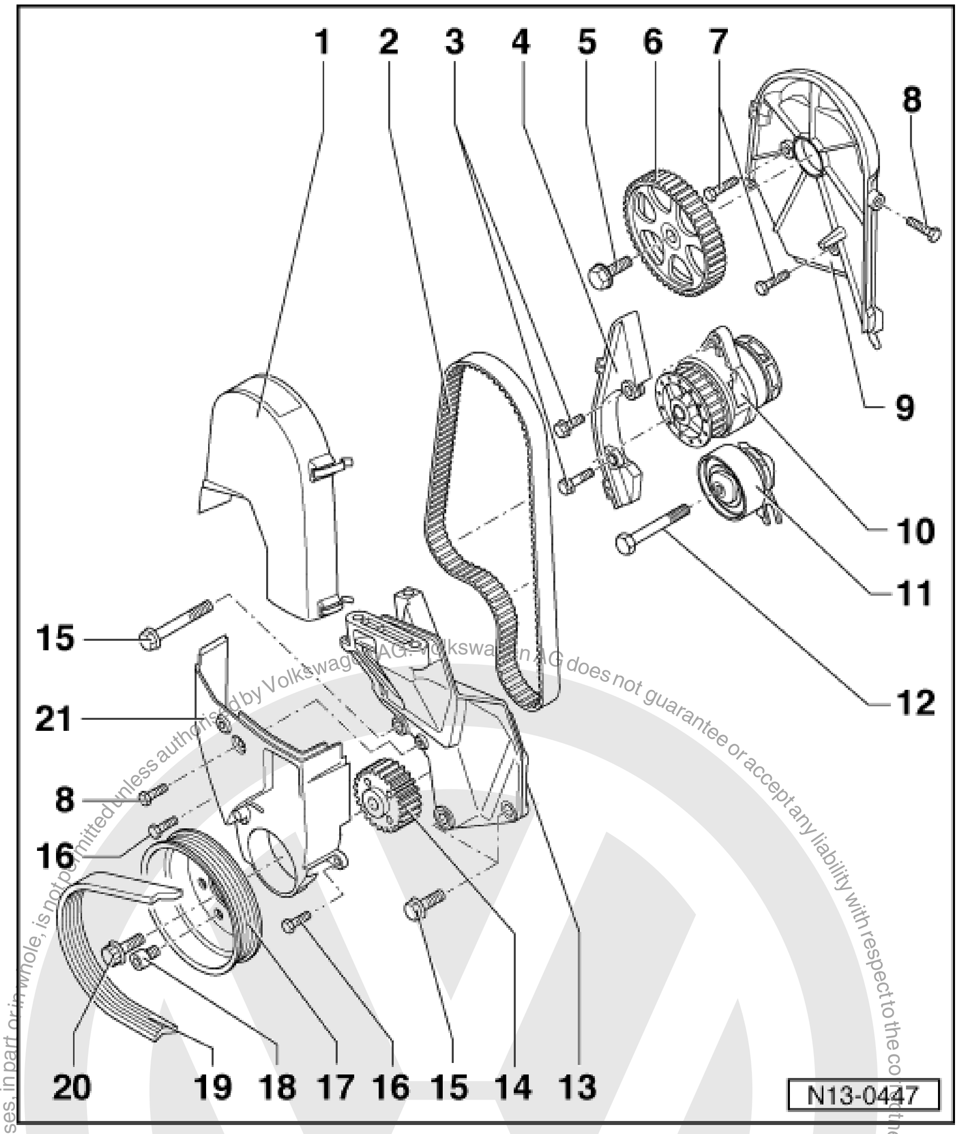

7 10 Nm
- Install with D6

8 10 Nm

9 Rear toothed belt guard

10 Coolant pump
- With integrated seal
- Seal must not be separated from coolant pump
- Replace damaged or leaking coolant pump together with seal
- Check for ease of movement

11 Tensioner
- Checking => Page 23
- Removing, installing and tensioning => Page 57

12 20 Nm

13 Console

Protected by copyright. Copying for private or commercial purposes, in part or in whole, is not permitted unless authorised by Volkswagen AG. Volkswagen AG does not guarantee or accept any liability with respect to the correctness of information in this document. Copyright by Volkswagen AG.

sateltronica

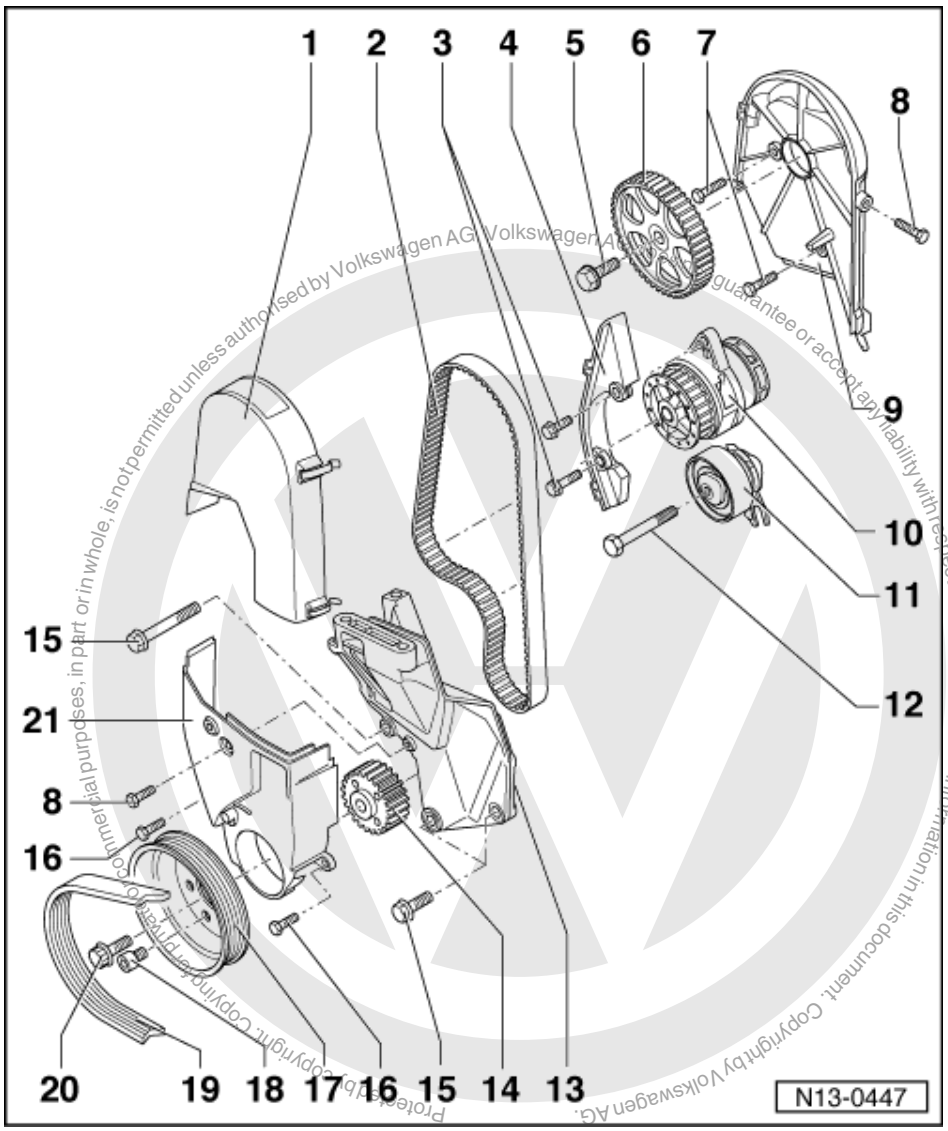

Protected by copyright. Copying for private or commercial purposes, in part or in whole, is not permitted unless authorised by Volkswagen AG. Volkswagen AG does not guarantee or accept any liability with respect to the correctness of information in this document. Copyright by Volkswagen AG.

14 Crankshaft toothed belt sprocket

- Note position when installing the toothed belt => Page 57

15 40 Nm + 1/4turn (90 °) further

- Renew

16 12 Nm

- Renew

17 Belt pulley

- When installing note fixing arrangement

18 20 Nm

19 Ribbed belt

- Mark direction of rotation before removing
- Removing and installing ribbed belt => Page 20

satelettronica

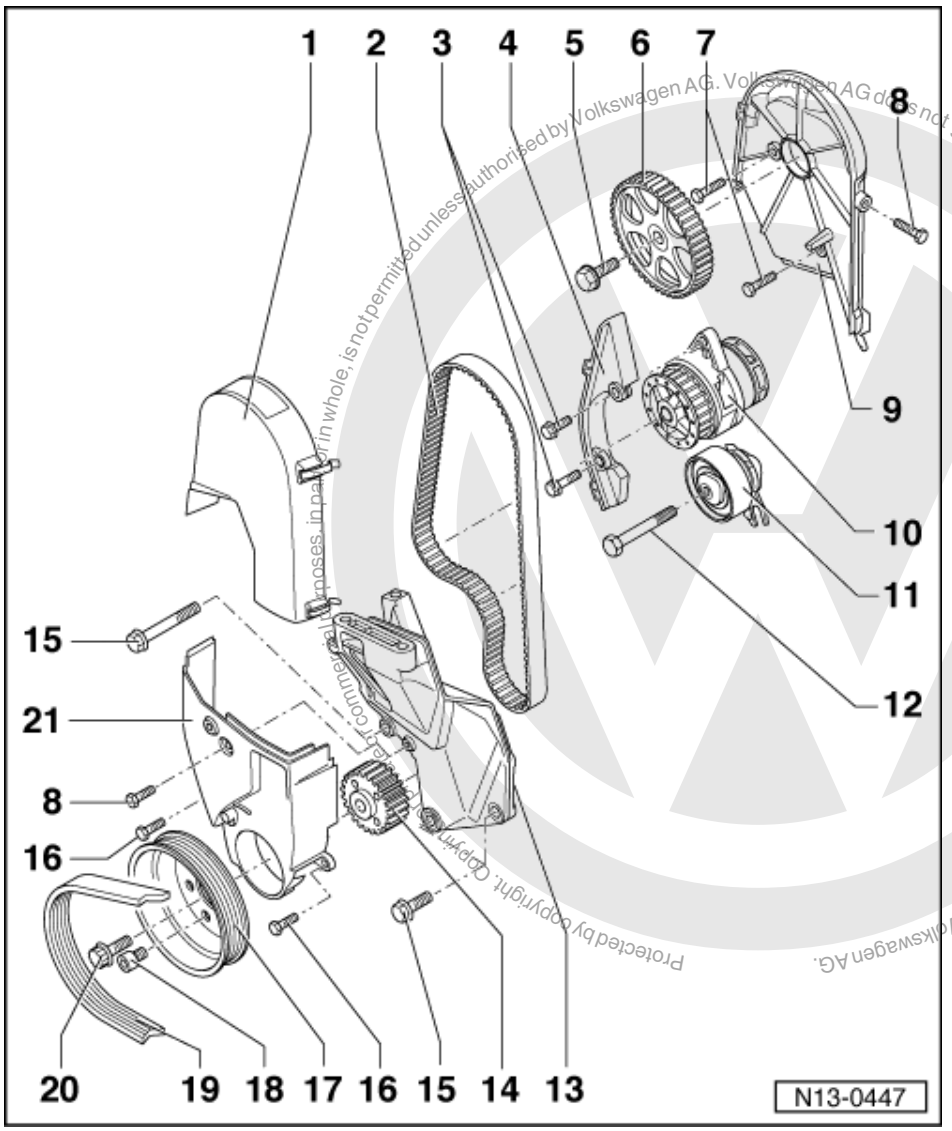

20 90 Nm + 1/4 turn (90 °) further

- Renew
- Oil threads
- Hold toothed belt sprocket with toothed belt sprocket holder 3099
- The turning further can be done in several stages
- The turning further angle can be checked with a commercial protractor e.g. Hazet 6690

21 Toothed belt guard - lower part

satelettronica

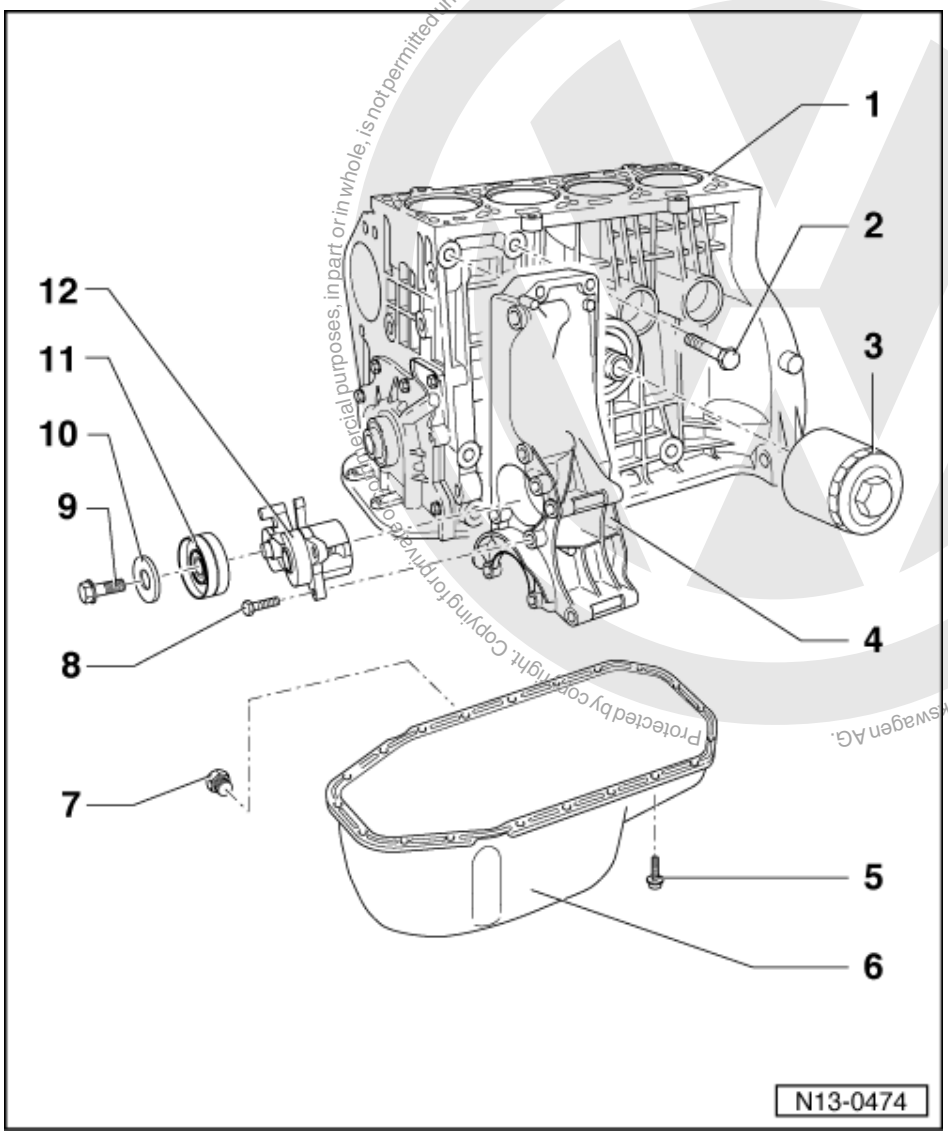

Part II

Note:

Servicing the clutch:

=> Repair group 30; Servicing clutch; Removing and installing clutch Servicing clutch Removing and installing clutch

1 Cylinder block
- Dismantling and assembling aluminium cylinder block => Page 26
- Dismantling and assembling pistons and conrods => Page 44

2 45 Nm
- Renew

3 Oil filter
- Loosen at hexagon bolt head
- Tighten by hand
- Note instructions on filter when installing

Protected by copyright. Copying for private or commercial purposes, in part or in whole, is not permitted unless authorised by Volkswagen AG. Volkswagen AG does not guarantee or accept any liability with respect to the correctness of information in this document. Copyright by Volkswagen AG.
satelettronica

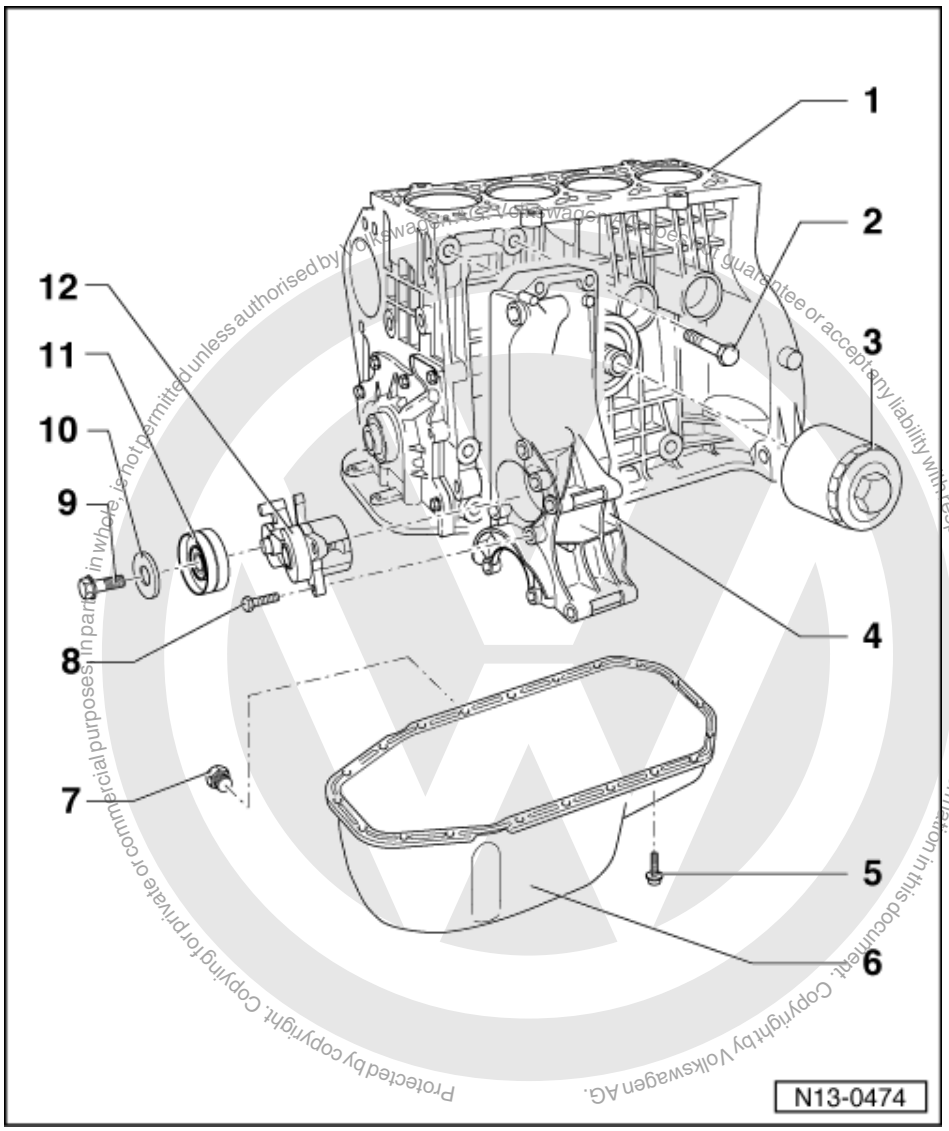

Protected by copyright. Copying for private or commercial purposes, in part or in whole, is not permitted unless authorised by Volkswagen AG. Copyright by Volkswagen AG. We do not guarantee or accept any liability with respect to the correctness of information in this document.

4 Compact bracket
- For vane pump and alternator
- Removing and installing compact bracket on vehicles with air conditioner:

=> Heating, Air conditioning; Repair group 87

5 15 Nm
- Loosen and tighten the flywheel end bolts only with socket insert 3249

6 Sump
- Removing and installing
  => Page 88

7 Oil drain plug, 30 Nm
- With attached seal
- Renew

8 M8: 20 Nm + 1/4 turn (90 °) further

9 45 Nm

satelettronica

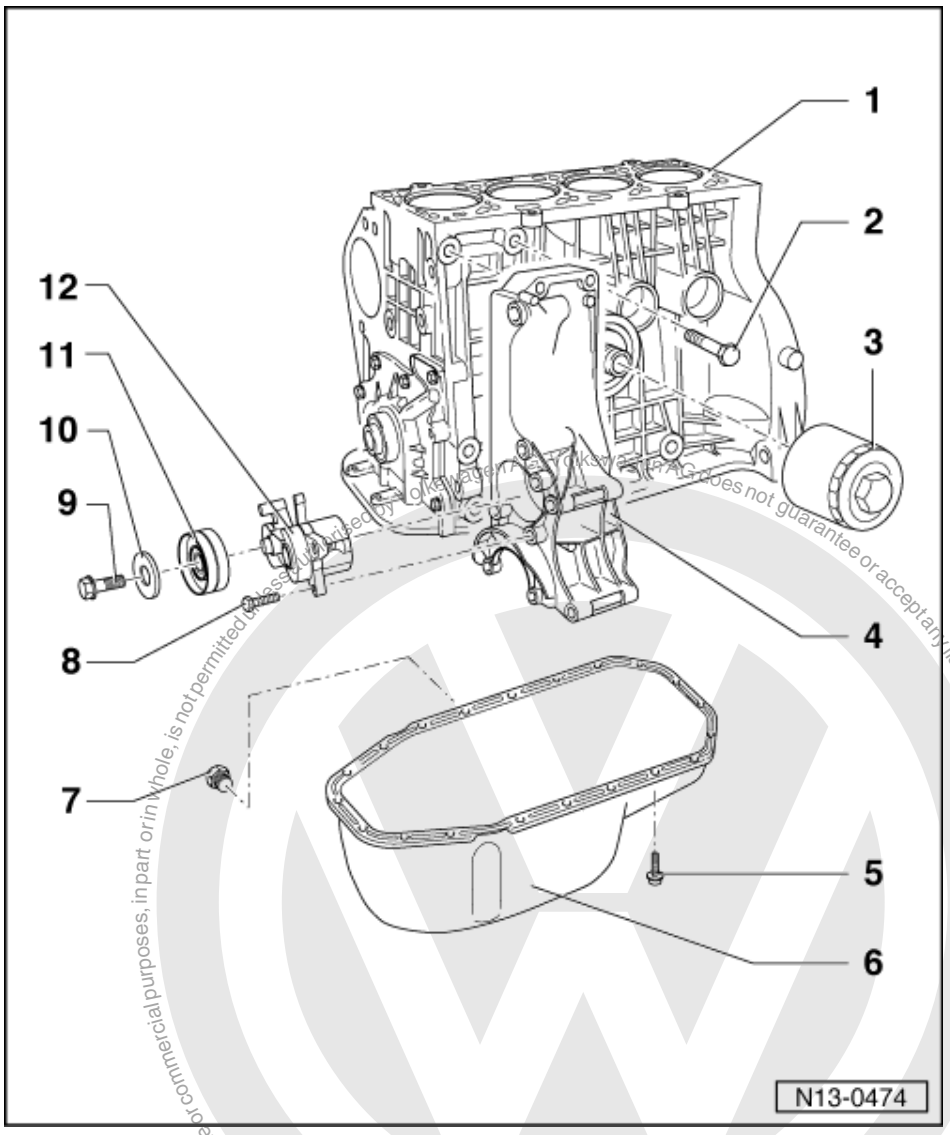

10 Washer
11 Tensioning roller
12 Tensioning element

1.2 - Removing and installing ribbed belt

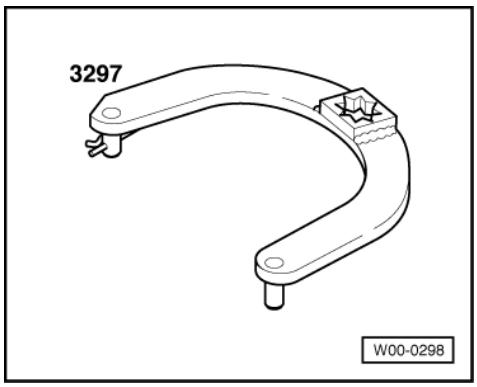

satelettronica

Vehicles without power assisted steering

Special tools, workshop equipment, testers, measuring instruments and auxiliary items required

- -> 3297 Tensioning lever

Work sequence

- Mark direction of rotation of ribbed belt.
- Loosen alternator securing bolts.

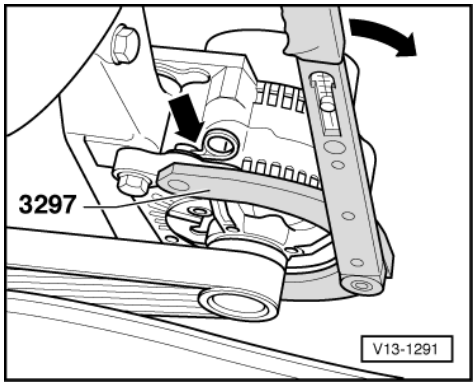

- -> Install tensioning lever 3297, secure with spring clip and swivel alternator down (to turn 3297 use e.g. torque wrench).
- Remove/fit ribbed belt

Note:

When installing the ribbed belt ensure that it sits correctly in the pulleys.

- After fitting ribbed belt with alternator loose, rotate engine several times (approx. 10 revolutions of engine by operating starter briefly.
- First tighten lower and then upper alternator bolts to
  25 Nm.

Vehicles with power assisted steering

Removing

- Remove ribbed belt cover.
- Mark ribbed belt direction of rotation.

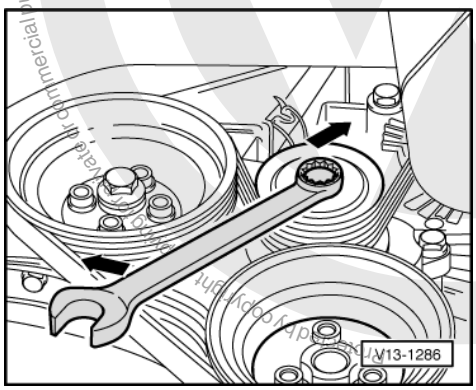

- -> Using a spanner on the securing bolt swivel tensioning roller in direction of arrow.
- Remove ribbed V-belt.

satelettronica

Installing

- Place ribbed V-belt onto crankshaft pulley first. Slide belt onto tensioning roller last.

Ribbed belt routing

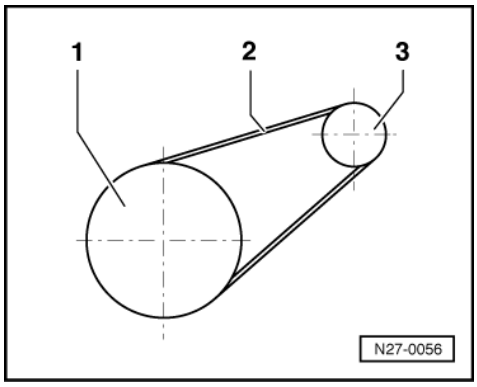

-> Basic belt drive

1 - Crankshaft/pulley
2 - Ribbed belt
3 - Pulley - Alternator

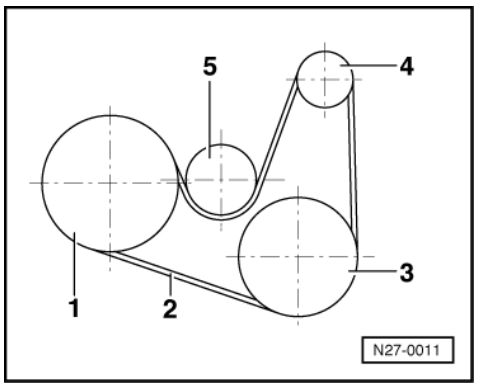

-> Belt drive without air conditioner compressor

1 - Crankshaft/pulley
2 - Ribbed belt
3 - Pulley - P.A.S. vane pump
4 - Pulley - Alternator
5 - Tensioner

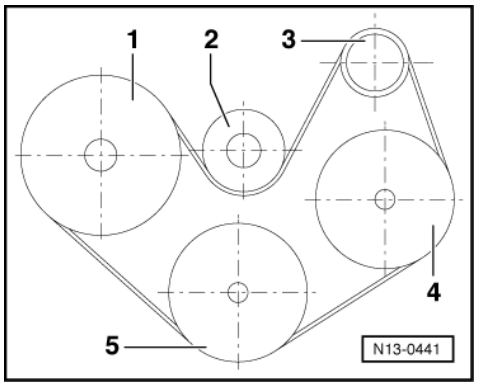

Protected by copyright. Copying for private or commercial purposes, part or in whole, is not permitted unless authorised by Volkswagen AG. Volkswagen AG does not guarantee or accept any liability with respect to the correctness of information in this document. Copyright by Volkswagen AG.
satelettronica

-> Belt drive with air conditioner compressor

1 - Crankshaft/pulley
2 - Tensioner
3 - Pulley - Alternator
4- Air conditioner compressor
5 - Pulley - P.A.S. vane pump

Note:

When installing the ribbed V-belt, ensure the belt runs in the right direction and seats correctly on the belt pulleys.

The rest of the assembly is basically a reverse of the dismantling sequence.

1.3 - Checking semi-automatic toothed belt tensioning roller

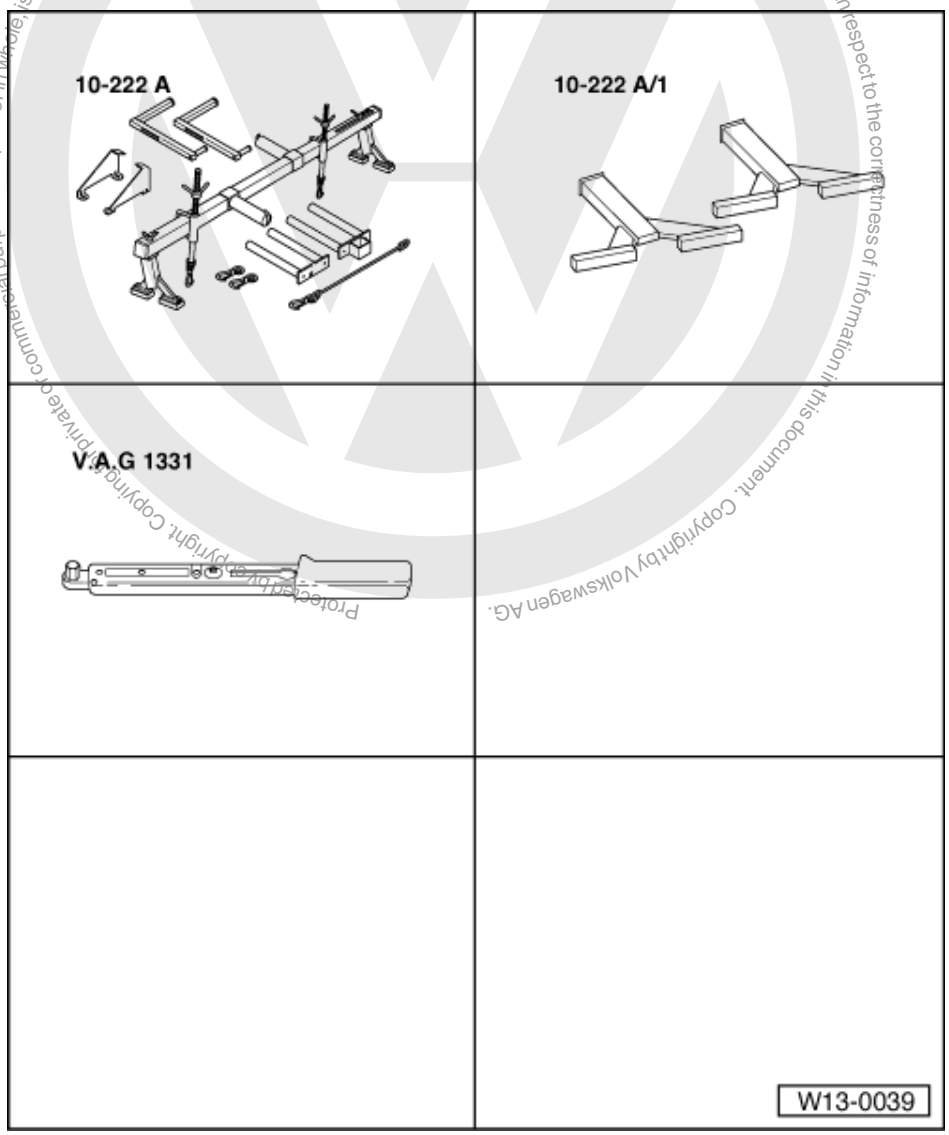

Special tools, workshop equipment, test and measuring appliances and auxiliary items required

- 10-222A Support bracket
- 10-222A/1 Support for support bracket

satelettronica

- V.A.G 1331 Torque wrench (5...50 Nm)

Test sequence

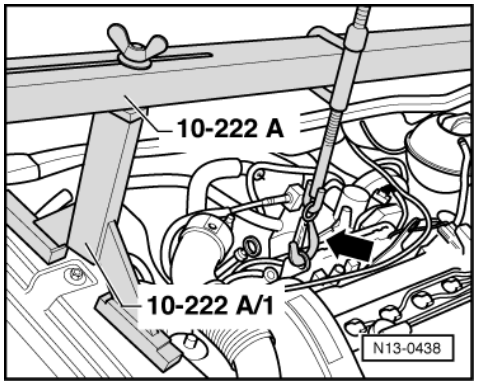

The engine must be lowered slightly as follows to enable the crankshaft sprocket to be removed:

- Remove air cleaner:

=> Repair group 24; Servicing injection; Dismantling and assembling air cleaner Servicing injection Dismantling and assembling air cleaner

- -> Fit support 10-222A with legs 10-222A/1 as shown.
- Take-up weight of engine, and remove right engine mounting.
- Lower engine slightly.
- Remove ribbed belt => Page 20 .
- Remove belt pulley as well as upper and lower toothed belt guard.
- Now turn the crankshaft two turns in direction of rotation until it is at top dead centre No. 1 cylinder.

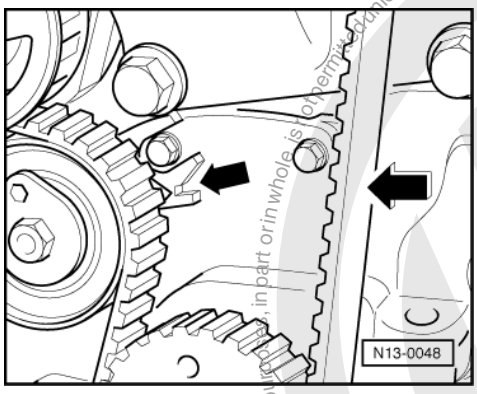

- -> Note the position of the tensioning roller indicator -arrow-. Press the toothed belt with firm thumb pressure. The indicator must move.
- Release tension on toothed belt.
- Turn crankshaft two turns in engine direction of rotation.
- Then check the position of the indicator. It must have returned to its original position.

If tensioning roller does not return to initial position:

- Replace tensioning roller.

If the tensioning roller is OK:

- Reinstall belt pulley and toothed belt guard upper and lower parts.
- Refit right engine mounting with new bolts => Page 10 , Engine assembly mounting.
- Refit the ribbed belt and the cover.

satelettronica

Volkswagen AG. Volkswagen AG does not guarantee or accept any liability with respect to the correctness of information in this document. Copyright by Volkswagen AG.

Note:

When installing the ribbed belt ensure that it sits correctly in the pulleys.

The rest of the assembly is basically a reverse of the dismantling sequence.

2 - Removing and installing cylinder block, sealing flange and flywheel/drive plate

2.1 - Removing and installing cylinder block, sealing flange and flywheel/drive plate

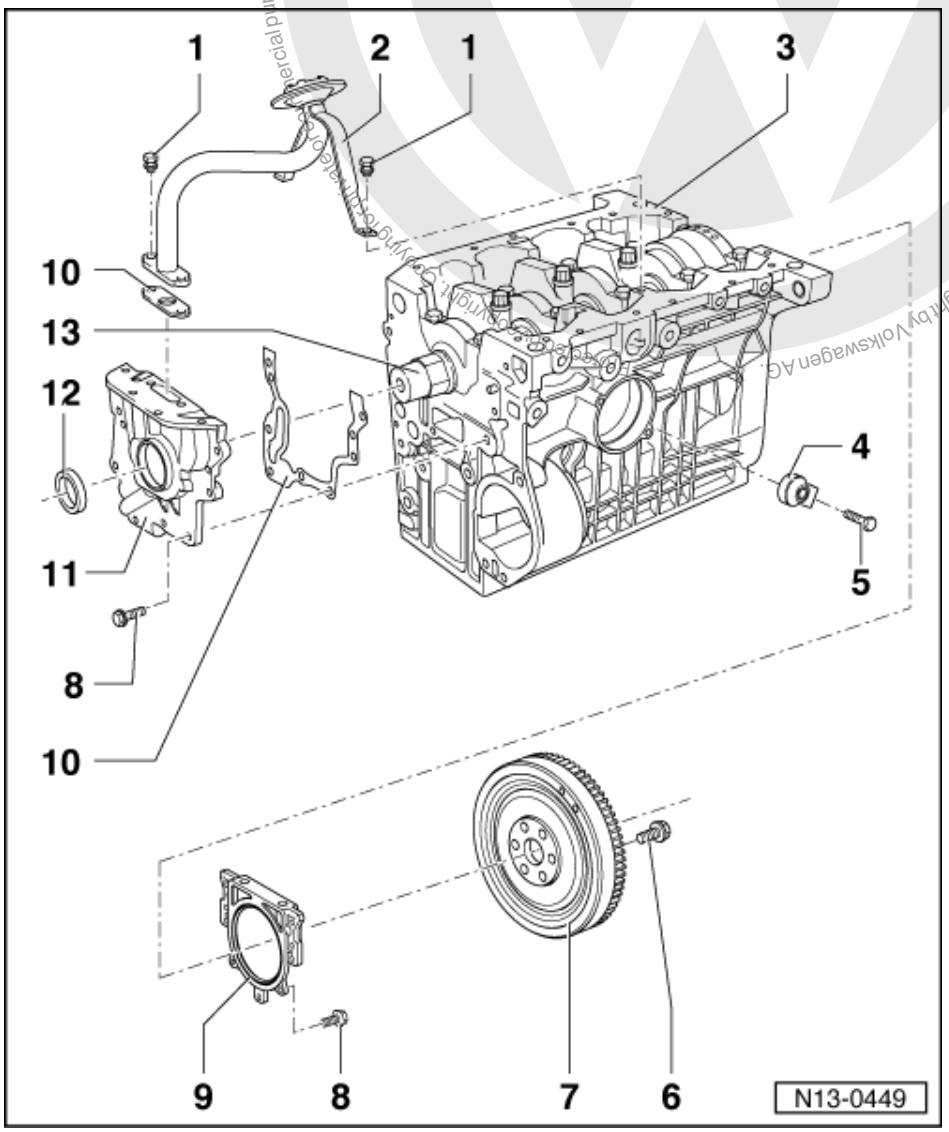

satelettronica

2.2 - Aluminium cylinder block

Warning!
The crankshaft must not be removed. Just loosening the main bearing caps will cause deformation of the cylinder block bearing pedestals. This deformation will cause a reduction of the bearing clearance. Even if the bearing shells are not renewed bearing damage could occur due to a different bearing clearance.
If the bearing cap bolts are loosened, the cylinder block must be replaced complete with the crankshaft.
Measuring the main bearing clearance is not possible with normal workshop equipment.

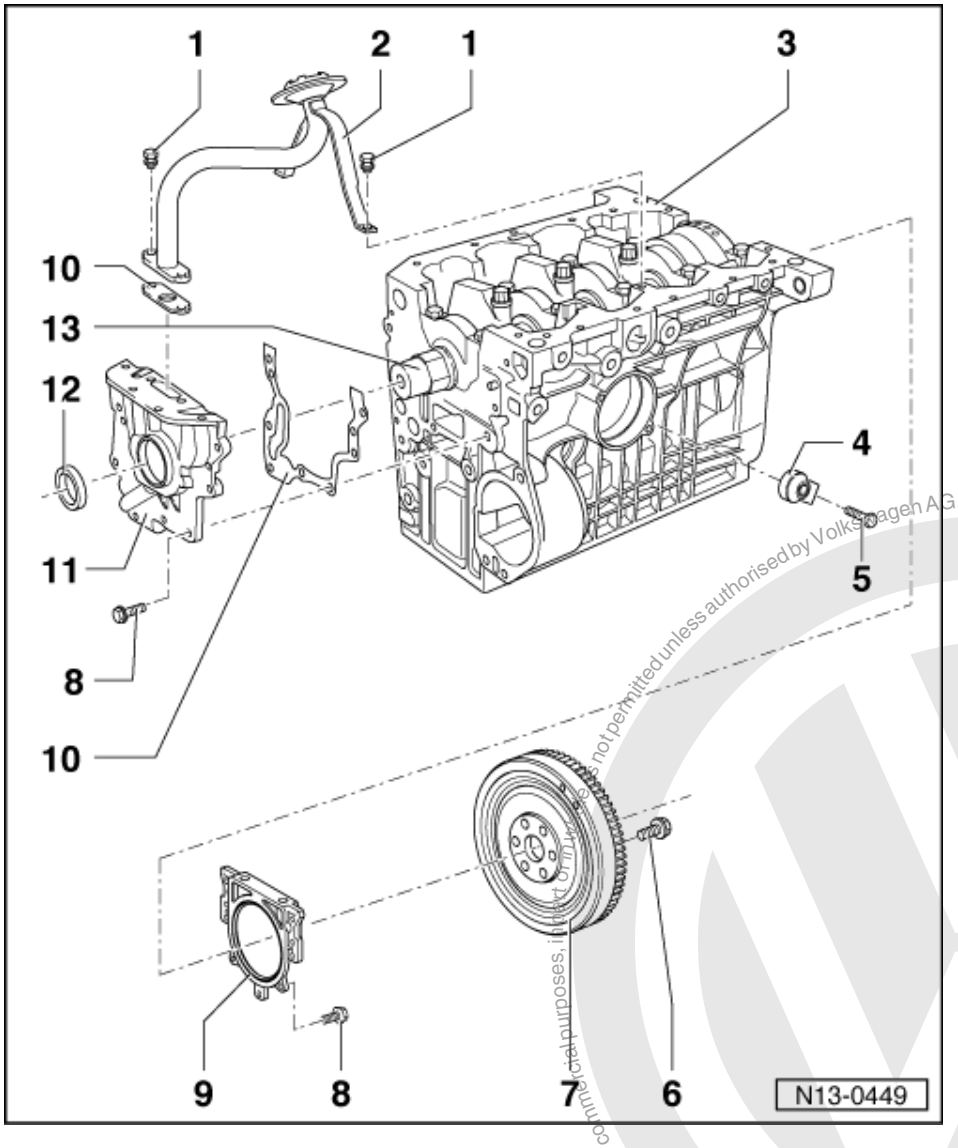

Note:

For repairs to the clutch:

=> Repair group 30; Servicing clutch; Removing and installing clutch Servicing clutch Removing and installing clutch

1 10 Nm
2 Suction pipe
3 Aluminium cylinder block

satelettronica
Protected by copyright. Copying for private or commercial purposes, in any form and by any means is not permitted unless authorised by Volkswagen AG. Volkswagen AG does not guarantee or accept any liability with respect to the correctness of information in this document. Copyright by Volkswagen AG.

4 Knock sensor
5 20 Nm
- Tightening torque influences the function of the knock sensor

6 60 Nm + 1/4 turn (90 °) further
- Renew

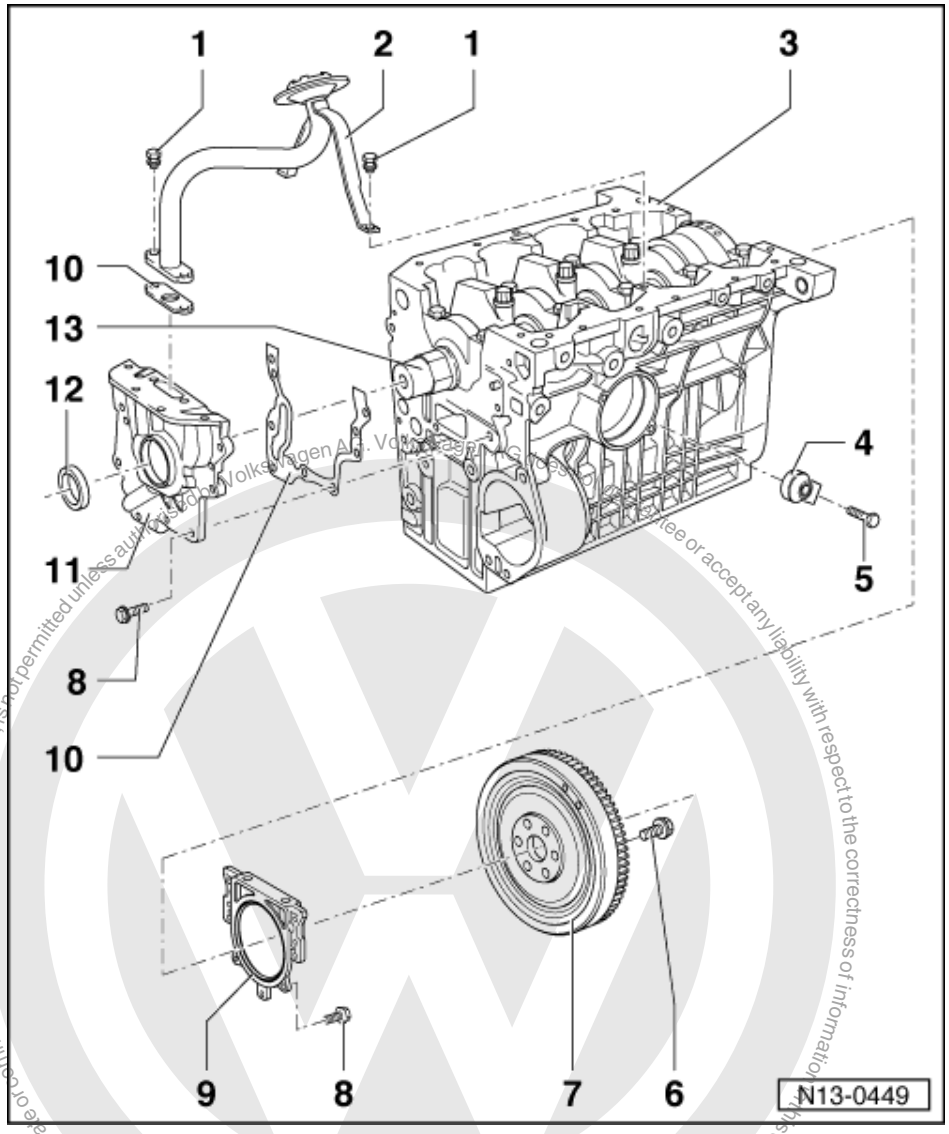

7 Flywheel/drive plate
- To remove and install flywheel counter-hold with 3067
- Removing and installing drive plate on vehicles with automatic gearbox => Page 31

8 12 Nm
- Renew

9 Sealing flange with sender wheel and oil seal
- Only renew complete with oil seal and sender wheel
- Removing and installing sealing flange =>Page 34 , Renewing crankshaft sealing flange -flywheel end-

10 Gasket
- Renew

satelettronica

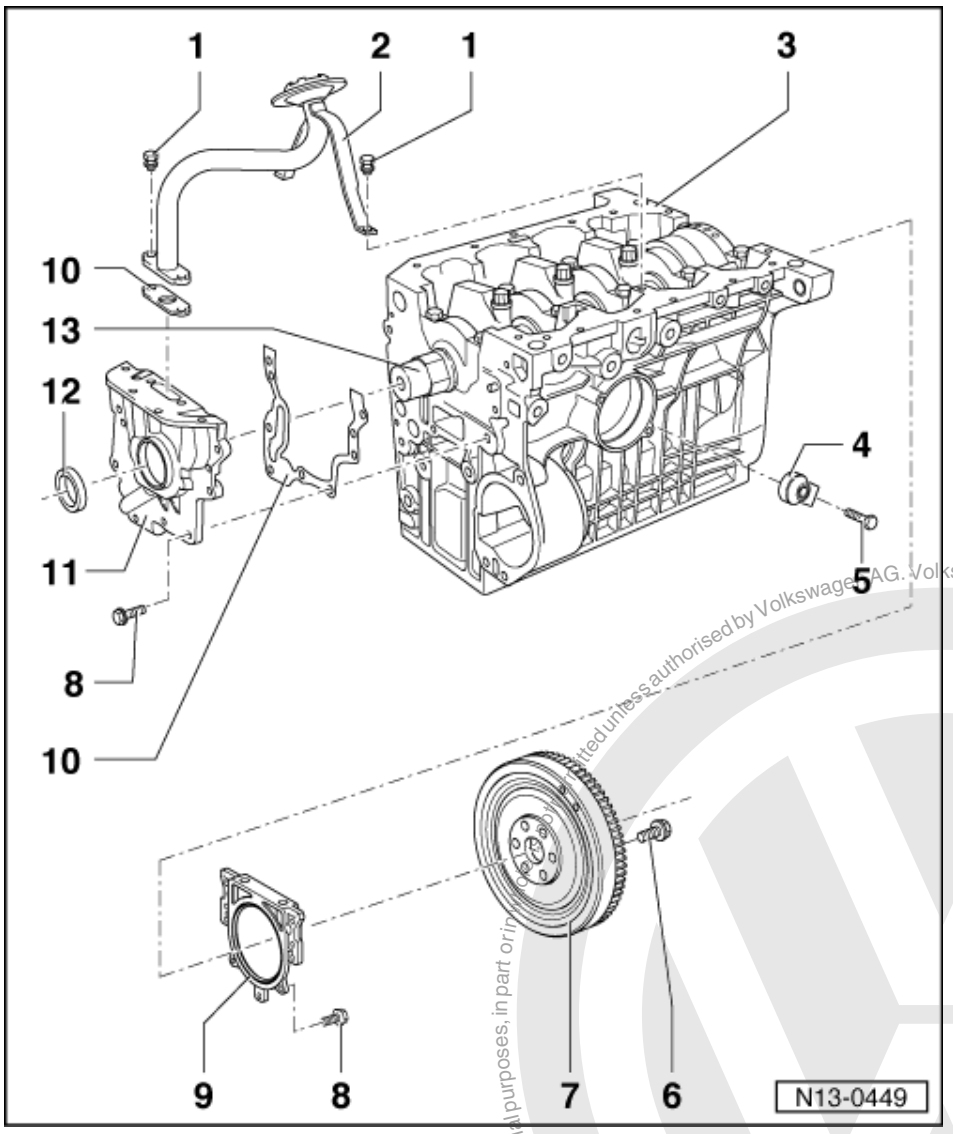

11 Oil pump

- Only renew complete
- When installing note follower -item 13 - on crankshaft
- Must be located on dowel sleeves
- Removing and installing => Page 83 , Removing and installing parts of lubrication system

12 Oil seal

- Renewing => Page 29

13 Follower

- Coat with oil before installing oil pump

Protected by copyright. Copying for private or commercial purposes, in part or in whole, is not permitted unless authorised by Volkswagen AG. Volkswagen AG does not guarantee or accept any liability with respect to the correctness of information in this document. Copyright by Volkswagen AG.
satelettronica

2.3 - Renewing crankshaft oil seal -belt pulley end

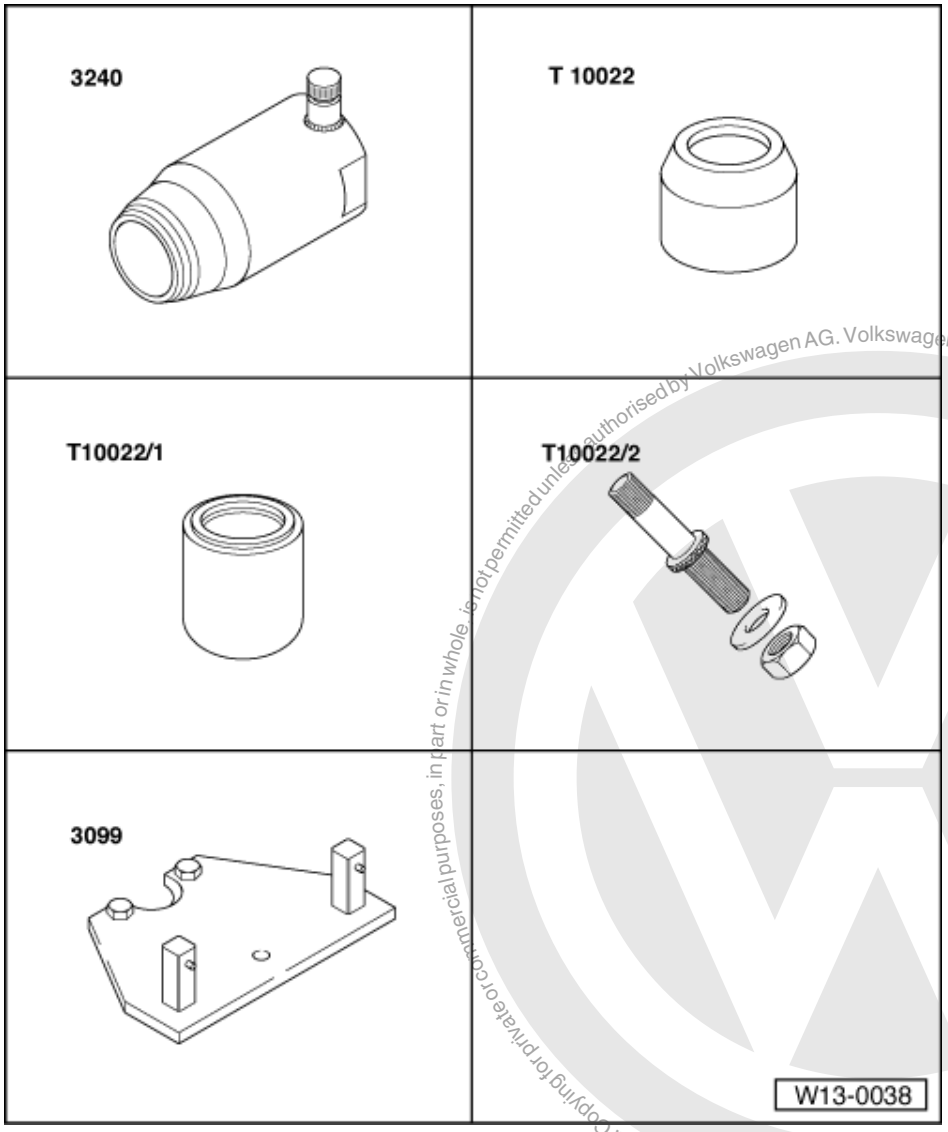

Protected by copyright. Copying for private or commercial purposes, in part or in whole, is not permitted unless authorised by Volkswagen AG. Volkswagen AG does not guarantee or accept any liability with respect to the correctness of information in this document. Copyright by Volkswagen AG.
satelettronica

Special tools, workshop equipment, test and measuring appliances and auxiliary items required

- 3240 Oil seal extractor
- T10022 Sleeve
- T10022/1 Press piece
- T10022/2 Spindle
- 3099 Counter-hold tool

Removing

- First remove toothed belt
  => Page 57 .
- Then remove crankshaft toothed belt sprocket. To do this secure counter-hold tool 3099 to toothed belt sprocket.
- To guide oil seal extractor screw crankshaft sprocket securing bolt into crankshaft onto stop.
- Unscrew inner part of oil seal extractor 3240 two turns (approx. 3 mm) out of the outer part and lock with knurled screw.

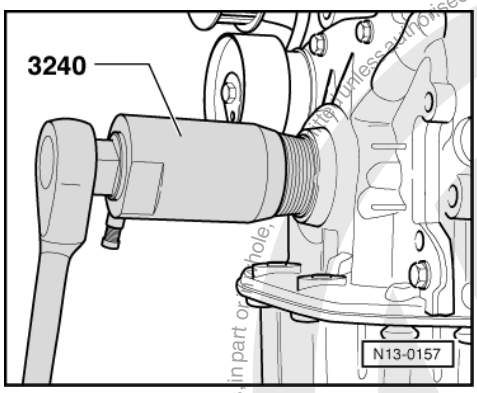

- -> Lubricate threaded head of oil seal extractor, place it in position and exerting firm pressure screw it as far as possible into oil seal.
- Loosen knurled screw and turn inner part against crankshaft until the oil seal is pulled out.

Installing

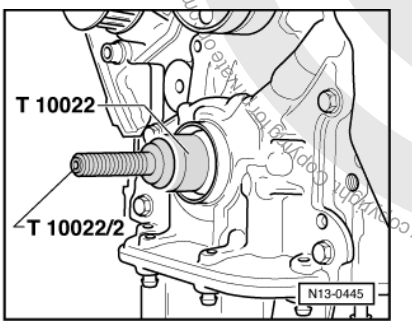

- Lightly oil sealing lip of oil seal.
- -> Fit sleeve T10022 onto crankshaft journal and turn spindle T10022/2 in onto stop.
- Slide oil seal over guide sleeve.

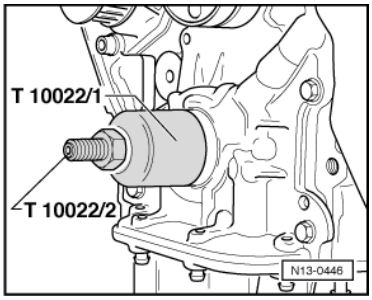

- -> Press in oil seal onto stop with press piece T10022/1.
- Install toothed belt => Page 57 .
- Install crankshaft toothed belt sprocket and hold with counter-hold 3099.

Volkswagen AG. Volkswagen AG does not guarantee or accept any liability with respect to the correctness of information in this document. Copyright by Volkswagen AG.
Protected by copyright. Copying for private or commercial purposes, in part or whole, is not permitted unless authorised by Volkswagen AG.
satelettronica

2.4 - Removing and installing drive plate

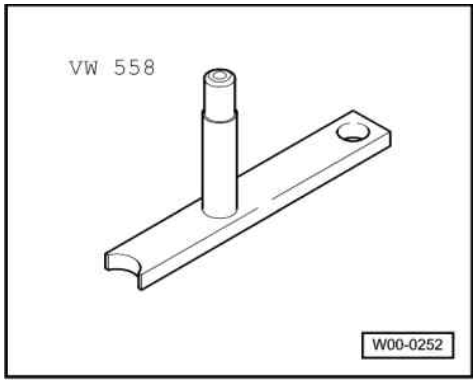

Special tools, workshop equipment, testers, measuring instruments and auxiliary items required

- VW 558 Retainer
- Hexagon bolt M8x45 and two M10 hexagon nuts
- Depth gauge

Loosening and tightening drive plate

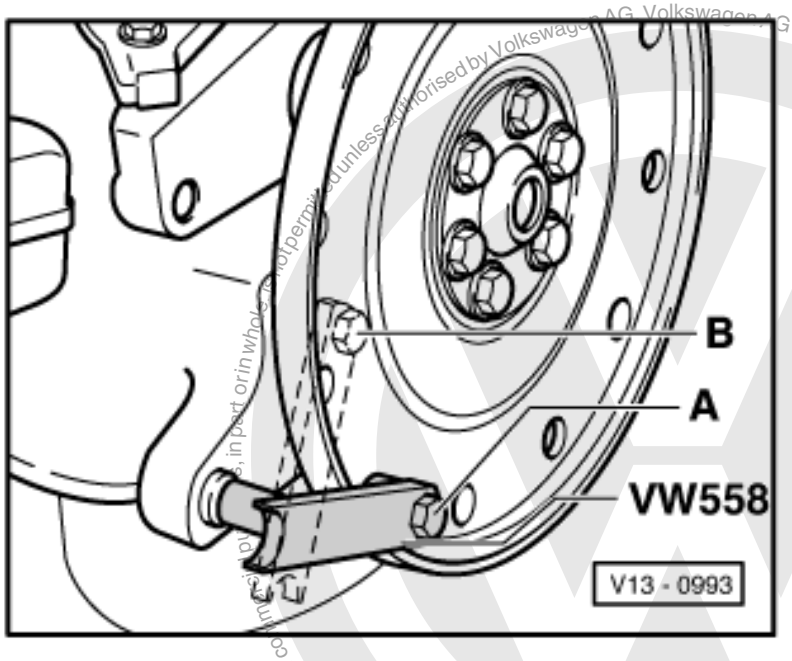

- -> Secure counter-hold tool VW 558 to the drive plate with a hexagon bolt M8x45. Place two M10 hexagon nuts between counter-hold tool and drive plate.

  Position of counter-hold tool:
  A - To loosen
  B - To tighten

satelettronica

Installing drive plate

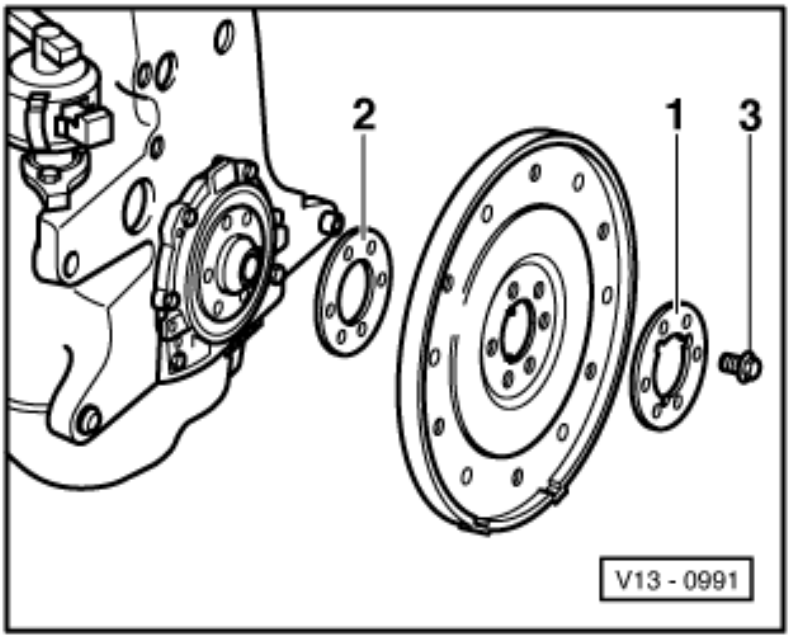

- -> Locate drive plate and packing plate with recesses -1-.
- Fit new bolts -3- and tighten to
  30 Nm.

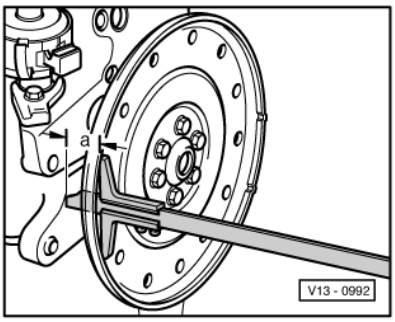

- -> Check dimension -a- at three points and calculate average.
  Specification: 19.7...21.3 mm

If the specification is not attained:

Protected by copyright. Copying for private or commercial purposes, in part or in whole, is not permitted unless authorised by Volkswagen AG. Volkswagen AG does not guarantee or accept any liability with respect to the correctness of information in this document. Copyright by Volkswagen AG.
satelettronica

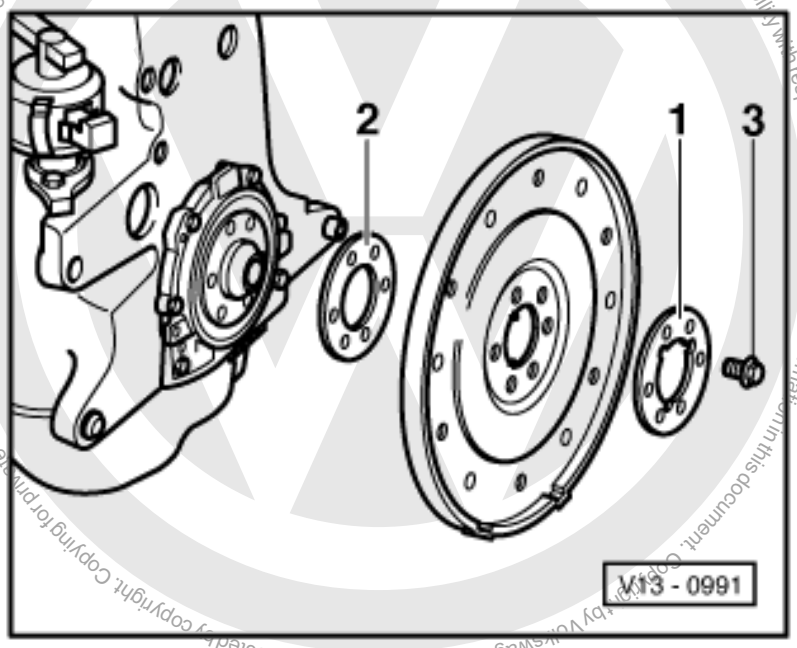

- -> Remove drive plate again and fit shim -2-. Again tighten bolts -3- to 30 Nm.
- Tighten bolts -3- to 60 Nm and turn 90° (1/4 turn) further (the additional 1/4 turn can be done in several stages).

Protected by copyright. Copying for private or commercial purposes, in part or in whole, is not permitted unless authorised by Volkswagen AG. Volkswagen AG does not guarantee or accept any liability with respect to the correctness of information in this document. Copyright by Volkswagen AG.

satelettronica

2.5 - Renewing crankshaft sealing flange -flywheel end-

Protected by copyright. Copying for private or commercial purposes, in part or in whole, is not permitted unless authorised by Volkswagen AG. Volkswagen AG does not guarantee or accept any liability with respect to the correctness of information in this document. Copyright by Volkswagen AG.

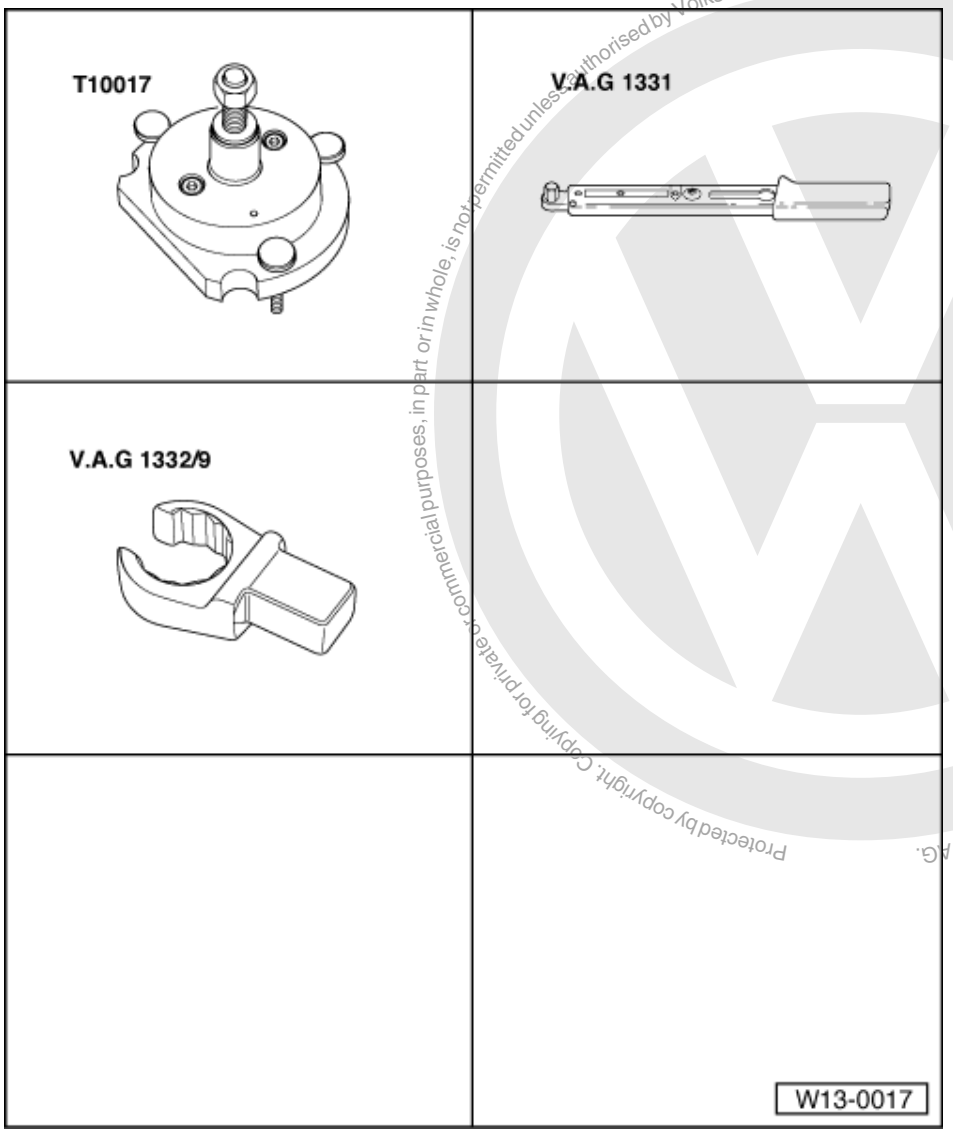

satelettronica

Special tools, workshop equipment, test and measuring appliances and auxiliary items required

- T10017 Assembly device
- V.A.G 1331 Torque wrench (5...50 Nm)
- V.A.G 1332/9 Open ring spanner
- Hexagon bolts (Qty. 3)
  M6 x 35 mm
- Feeler gauge
- Vernier gauge

Pressing sealing flange with sender wheel off crankshaft

Notes:

- To show the work sequence more clearly, the sequence is described for a removed engine.
- The work sequence is the same when the engine is in the vehicle and the gearbox removed.

Work sequence

- Remove the flywheel/drive plate.

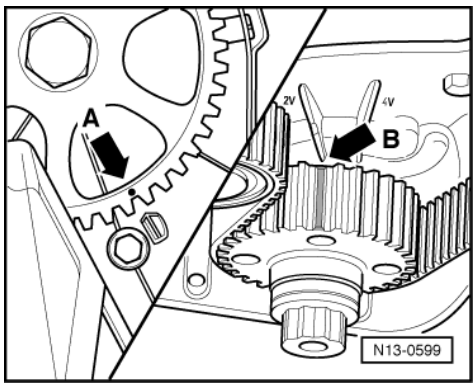

- -> Set camshaft sprocket to mark -arrow A-.
- Set crankshaft to TDC No. 1 cylinder. The ground tooth on the crankshaft toothed belt pulley must align with the marking -2V- on the sealing flange -arrow B-.
- Remove oil sump =>Page 88 .

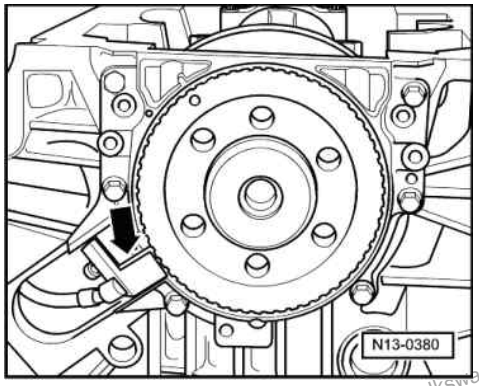

- -> Remove engine speed sender -arrow-.
- Undo sealing flange securing bolts.

Note:

Sealing flange and sender wheel are pressed off the crankshaft together with Qty. 3 M6 x 35 mm bolts.

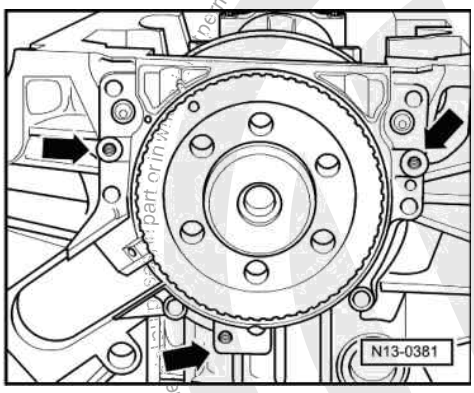

- -> Screw Qty. 3 M6 x 35 mm bolts into the threaded holes -arrows- of the sealing flange.
- Screw the bolts alternately (a 1/2 turn(180°) for each bolt) into the sealing flange and press the sealing flange along with the sender wheel off the crankshaft.

Pressing sealing flange with sender wheel onto crankshaft

Notes:

- Gradual introduction of a new generation of sealing flanges with PTFE seal (Teflon). The sealing flange with spring ring will continue to be offered as spare part.
  When fitting a new sealing flange, be careful to use the same type of sealing flange that was previously fitted.

satelettronica

- The sealing flange with a PTFE sealing ring is equipped with a sealing lip support ring. This support ring serves the function of a fitting sleeve and may not be removed prior to installation.
- Sealing flange and sender wheel must not be separated or twisted after removal from packaging.
- The sender wheel of a sealing flange with spring ring has an Elastomer coating on the sealing surface to crankshaft. This coating must never come into contact with dirt or grease.

- The sender wheel is held in its installation position by a fixture on the assembly device T10017 locating pin.
- Sealing flange and seal are one unit and must be replaced together with the sender wheel only.

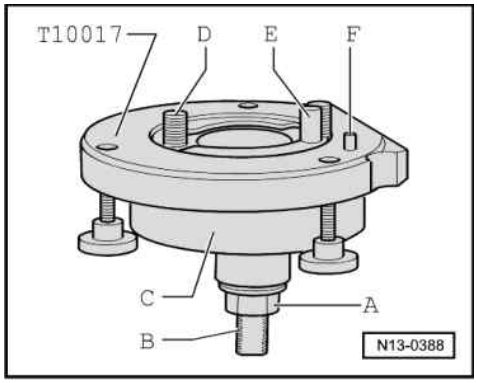

- The assembly appliance T10017 maintains its installation position to the crankshaft via a guide pin which is inserted into a threaded hole in the pressure plate/drive plate.

-> A - Hexagon nut
B - Clamping surface (ground section of spindle)
C - Tool bell housing
D - Socket head bolt
E - Guide pin
F - Locating pin

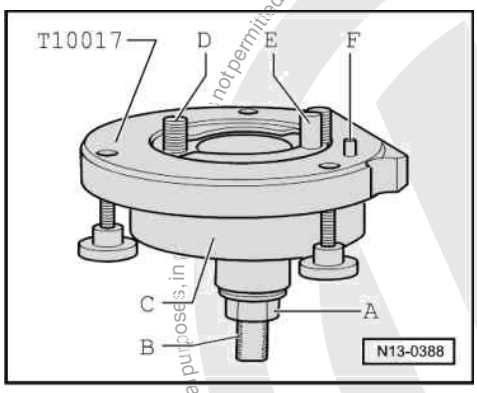

A-Assembling sealing flange with sender wheel on assembly appliance T10017

- -> Screw hexagon nut -A- to shortly before the clamping surface (ground section) -B- on the threaded spindle.

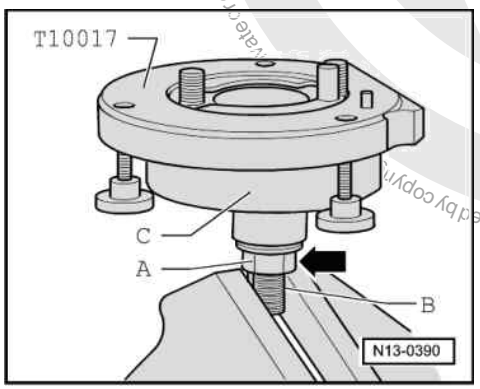

satelettronica

- -> Clamp assembly appliance T10017 in a vice on clamping surface (ground section) on threaded spindle.
- Press assembly bell housing -C- downwards so that it lies on the hexagon nut -A- -arrow-.

Note:

Inner part of assembly appliance and assembly bell housing must be at same height (level).

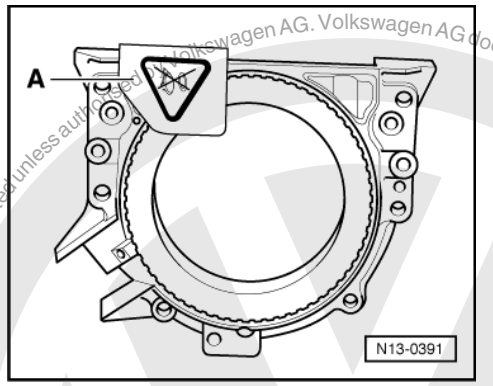

- -> Remove securing clip -A- on new sealing flange.

Note:

The sender wheel must not be taken out of the sealing flange or twisted.

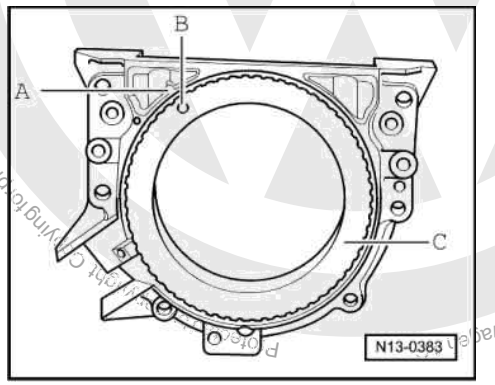

-> The locating hole -B- on the sender wheel -C- must align with the marking -A- on the sealing flange.

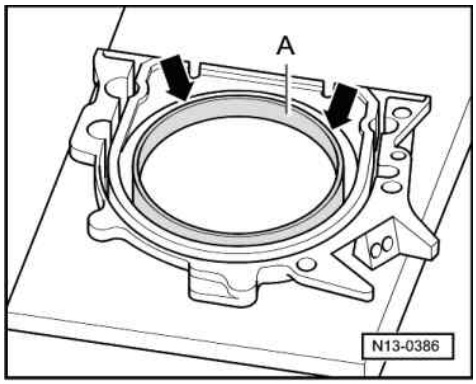

- -> Place the sealing flange (with the forward side downwards) on a clean flat surface.
- Push the sender wheel (sealing lip support ring for PTFE sealing ring) -A- downwards in direction of arrow until it lies on the flat surface.

Copyright by Volkswagen AG. Volkswagen AG does not guarantee or accept any liability with respect to the correctness of information in this document. Copyright by Volkswagen AG. Volkswagen AG. Copying for private or commercial purposes, in part or in whole, is not permitted unless authorised.
satelettronica

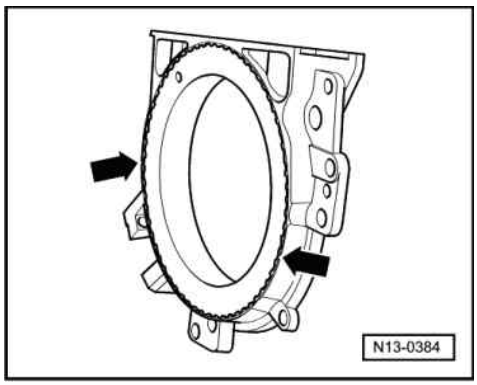

-> The upper edge of the sender wheel and the forward edge of the sealing flange must align -arrows-.

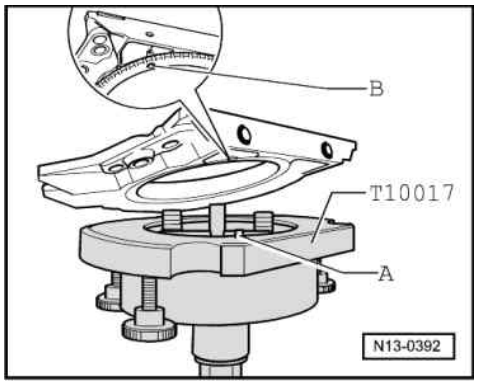

- -> Place the sealing flange, with the forward side on the assembly appliance T10017, so that the locating pin -A- can be inserted in the sender wheel hole -B-.

Note:

Ensure the sealing flange lies flat on the assembly appliance.

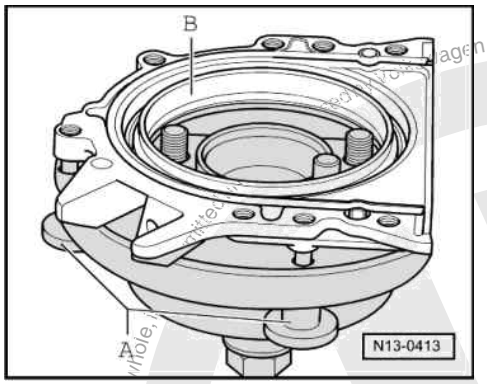

- -> Push the sender wheel -B- (Sealing lip support ring for PTFE sealing ring) onto the surface of the assembly appliance whilst tightening the three knurled screws -A-, so that the locating pin cannot slide out of sender wheel hole.

Note:

Ensure the sender wheel remains fixed on the assembly appliance when installing the sealing flange.

B-Assembling appliance T10017 with sealing flange on crankshaft flange

Prerequisites

- Crankshaft flange must be free of oil and grease.

Protected by copyright. Copying for private or commercial purposes, in part or in whole, is not permitted unless authorised by Volkswagen AG. Volkswagen AG does not guarantee or accept any liability with respect to the correctness of information in this document. Copyright by Volkswagen AG.

satelettronica

- Engine positioned at TDC No. 1 cylinder.

Work sequence

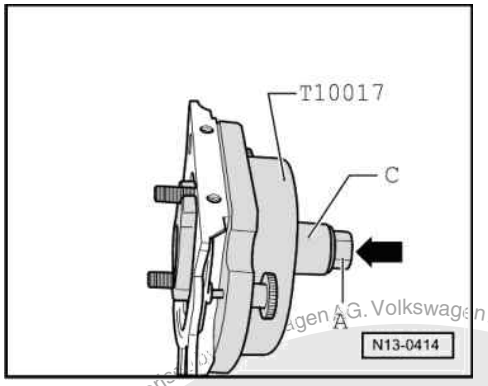

- -> Unscrew hexagon nut -A- to end of threaded spindle.
- Press assembly appliance threaded spindle in direction of arrow, until the hexagon nut -A- lies against the assembly bell housing -C-.
- Align flat side of assembly bell housing towards oil sump side of crankcase sealing surface.

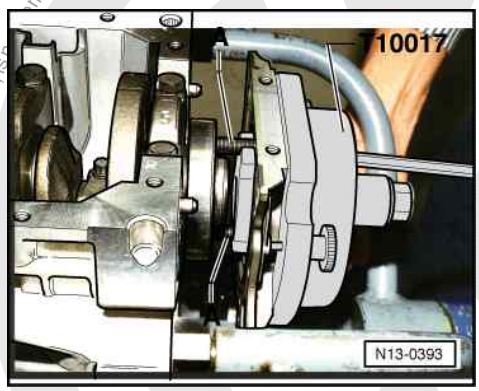

-> Secure assembly appliance to crankshaft flange with hexagon socket head bolts -A-

Note:

Screw hexagon socket head bolts -A- into crankshaft flange (approx. 5 threads).

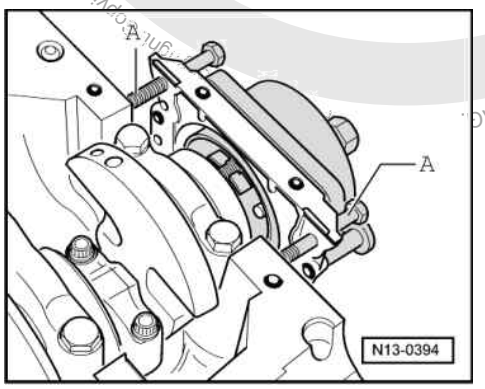

- -> Screw two M6 x 35 mm bolts -A- into cylinder block to guide sealing flange.

satelettronica

C-Fitting assembly appliance T10017 onto crankshaft flange

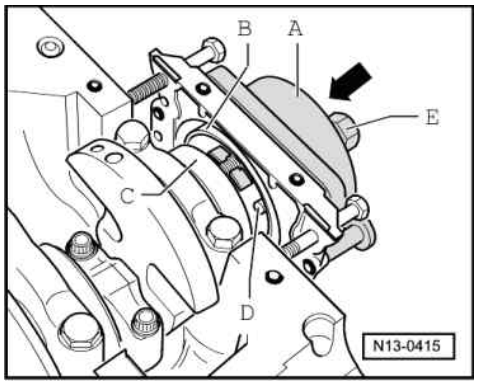

- -> Slide assembly bell housing -A- in direction of arrow by hand until the sender wheel - B- (Sealing lip support ring for PTFE sealing ring) lies against the crankshaft flange -C-.

Note:

The assembly appliance guide pin -D- is guided into threaded hole in crankshaft during the fitting sequence. This ensures the sender wheel reaches its final installation position.

- Hold assembly bell housing in this position and screw both assembly appliance hexagon socket head bolts hand tight.
- Screw hexagon nut -E- onto threaded spindle by hand until it lies against the assembly bell housing -A-.

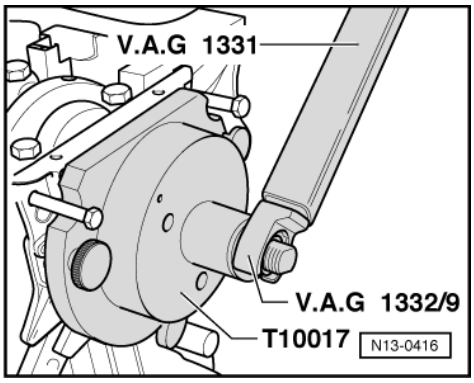

D-Pressing sender wheel onto crankshaft flange with assembly appliance T10017

- -> Tighten assembly appliance hexagon nut with torque wrench V.A.G 1331 and open jaw spanner V.A.G 1332/9.
  Tightening torque: 35 Nm

Note:

A small air gap must be present between cylinder block and sealing flange after tightening hexagon nut to 35 Nm.

E-Checking sender wheel installation position on crankshaft

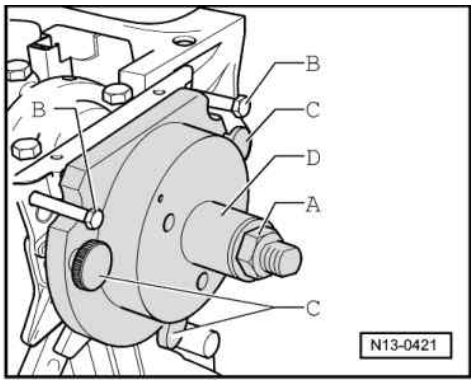

satelettronica
Protected by copyright. Copying for private or commercial purposes, in part or in whole, is not permitted unless authorised by Volkswagen AG. Volkswagen AG does not guarantee or accept any liability with respect to the correctness of information in this document. Copyright by Volkswagen AG

- -> Screw hexagon nut -A- to end of threaded spindle.
- Remove the two M6 x 35 mm hexagon bolts -B- from cylinder block.
- Screw the three thumb wheels -C- out of sealing flange.
- Pull assembly appliance assembly bell housing -D- back to hexagon nut -A- (Only for sealing flange with spring ring).

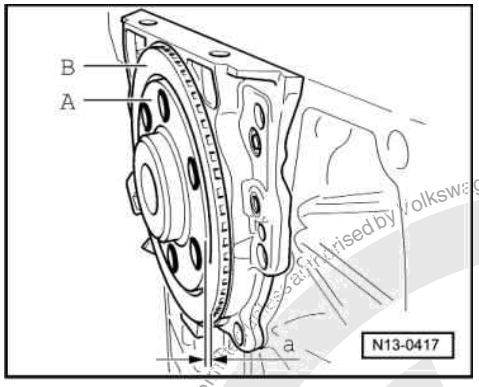

-> The sender wheel has the correct installation position on crankshaft when a gap of
-a- = 0.5 mm
exists between crankshaft flange -A- and sender wheel -B-.

Note:

If the sealing flange has a PTFE sealing ring, completely unbolt the assembly appliance T10017 and remove the sealing lip support ring.

To enable the measurements to be shown more clearly the crankshaft flange is illustrated without the fitted assembly appliance T10017.

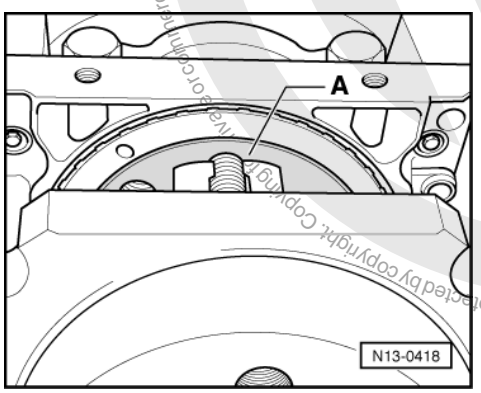

- -> Place a vernier caliper against the crankshaft flange -A- (hatched area).

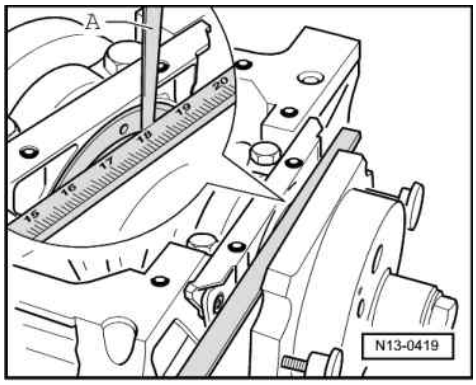

- -> Measure the distance -a- between vernier caliper and sender wheel with a feeler gauge -A-.

Protected by copyright. Copying for private or commercial purposes, in part or in whole, is not permitted unless authorised by Volkswagen AG. Volkswagen AG does not guarantee or accept any liability with respect to the correctness of information in this document. Copyright by Volkswagen AG.
satelettronica

Is measurement -a- too small:

- Re-press sender wheel =>Page 42 .

When dimension -a- is achieved:

- Remove assembly appliance.
- Tighten the new securing bolts for the sealing flange using alternate and diagonal sequence.
  Tightening torque: 12 Nm

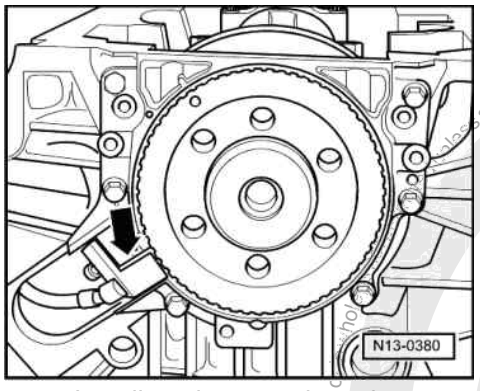

- -> Install engine speed sender -arrow-.
  Tightening torque: 5 Nm
- Install sump => Page 88 .
- Install flywheel/drive plate with new bolts.

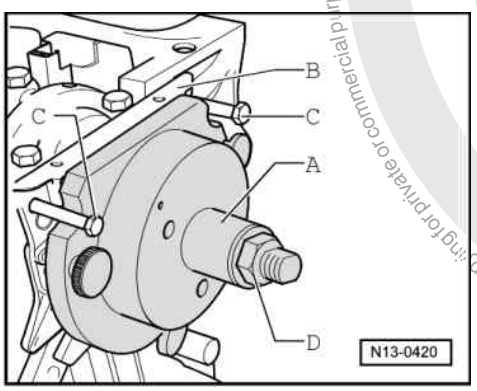

F-Re-pressing sender wheel

- -> Slide assembly bell housing -A- to sealing flange -B- by hand.
- Screw two M6 x 35 mm bolts -C- into cylinder block to guide sealing flange -B-.
- Screw hexagon nut -D- along threaded spindle, by hand, until it contacts the assembly bell housing -A-.

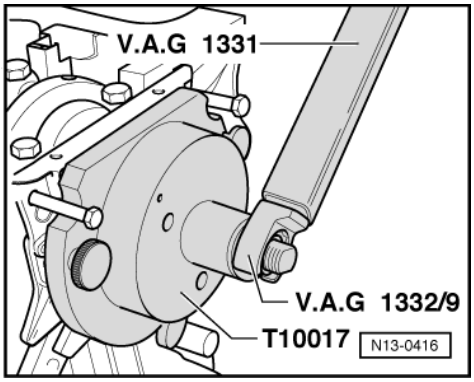

- -> Tighten assembly appliance hexagon nut with torque wrench V.A.G 1331 and open jaw spanner V.A.G 1332/9.
  Tightening torque: 40 Nm

Protected by copyright. Copying for private or commercial purposes, in part or in whole, is not permitted unless authorised by Volkswagen AG. Volkswagen AG does not guarantee or accept any liability with respect to the correctness of information in this document. Copyright by Volkswagen AG.
satelettronica

- Check installation position of sender wheel on crankshaft again => Page 40 .

If dimension -a- is too small again:

- Tighten hexagon nut to
  45 Nm.
- Check installation position of sender wheel on crankshaft again => Page 40 .

2.6 - Crankshaft dimensions

Honing dimensions in mm	Conrod journal ø Engine codes	
	ALD, AUC	AKK, AKP, AUD
Basic dimension	-0.022 42.00 -0.037	-0.022 47.80 -0.037
1st undersize	-0.022 41.75 -0.037	-0.022 47.55 -0.037
2nd undersize	-0.022 41.50 -0.037	-0.022 47.30 -0.037
3rd undersize	-0.022 41.25 -0.037	-0.022 47.05 -0.037

Protected by copyright. Copying for private or commercial purposes, in part or in whole, is not permitted unless authorised by Volkswagen AG. Volkswagen AG does not guarantee or accept any liability with respect to the correctness of information in this document. Copyright by Volkswagen AG.
satelettronica

3 - Dismantling and assembling pistons and conrods

3.1 - Dismantling and assembling pistons and conrods

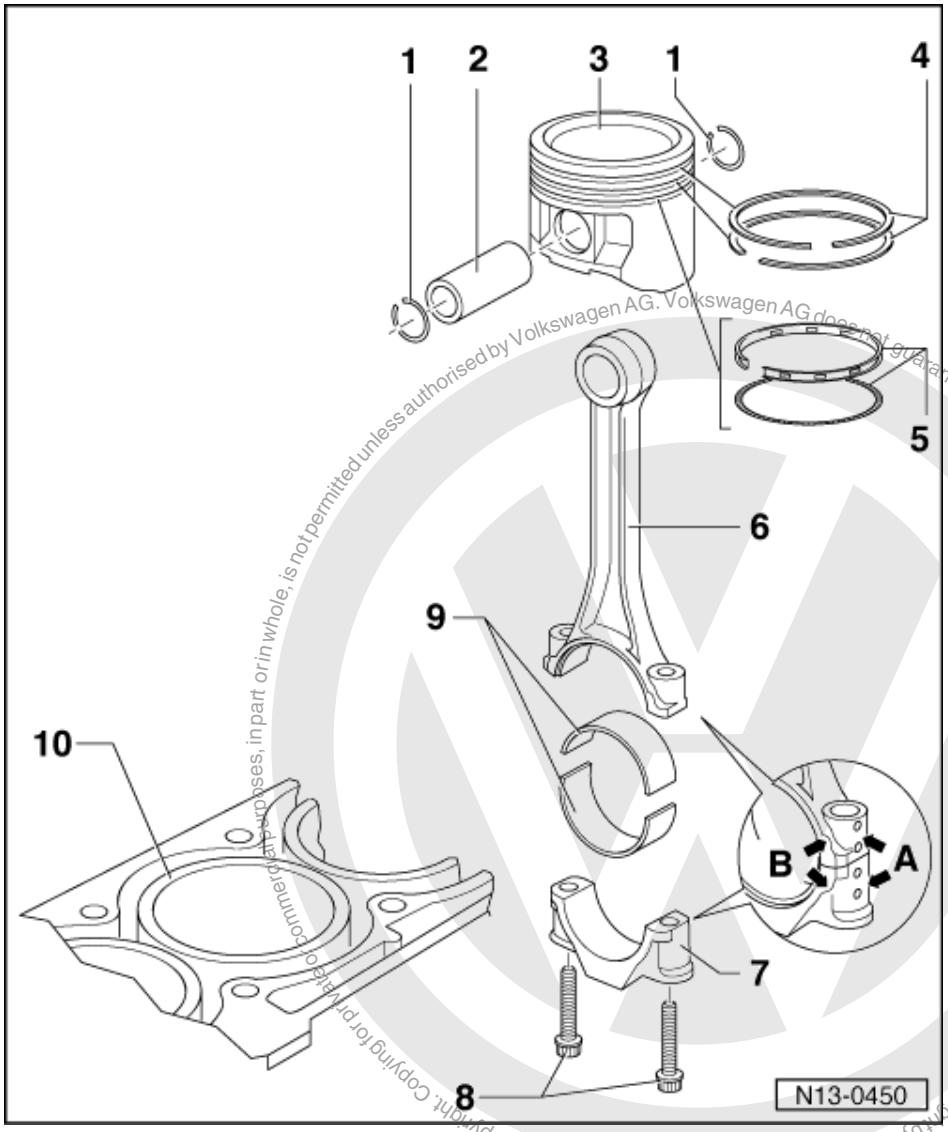

Protected by copyright. Copying for private or commercial purposes, in part or in whole, is not permitted unless authorised by Volkswagen AG. Volkswagen AG does not guarantee or accept any liability with respect to the correctness of information in this document. Copyright by Volkswagen AG.

1 Circlip
2 Piston pin
- If difficult to remove, heat piston to 60 °C
- Remove and install with 10-14

3 Piston
- Checking => Fig. 3
- Mark installation position and cylinder number
- Arrow on piston crown points to pulley end
- Install using piston ring clamp

satelettronica

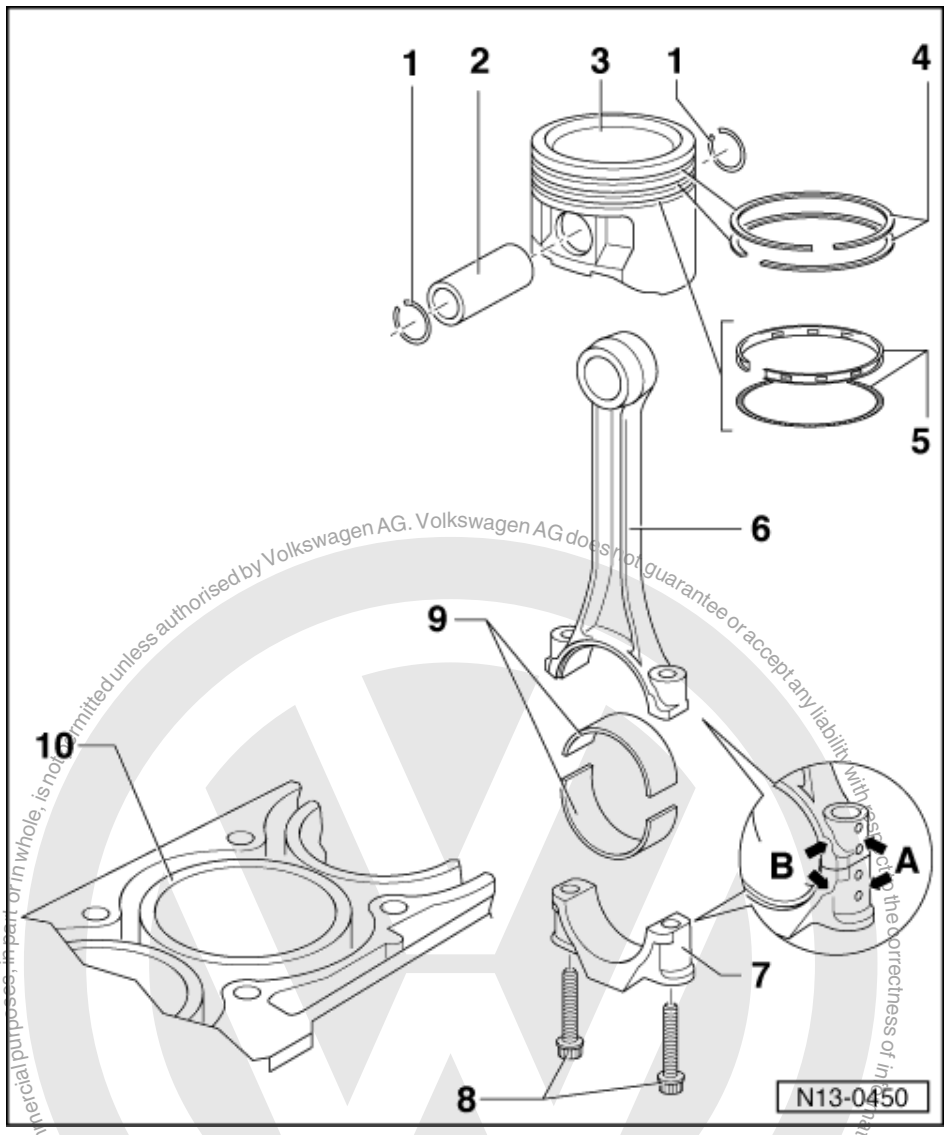

4 Compression rings
- Offset gaps by 120 °
- Remove and install compression rings with piston ring pliers
- "TOP" faces towards piston crown
- Checking ring gap=> Fig. 1
- Checking ring to groove clearance => Fig. 2

5 Oil scraper ring
- Remove and install spiral-type expander carefully by hand
- "TOP" faces towards piston crown
- Checking ring gap=> Fig. 1
- Checking ring to groove clearance => Fig. 2

6 Conrod
- Only renew as a set
- Mark cylinder number -A-
- Installation position: Marking -B- faces towards pulley end
- Guided axially via piston

satelettronica

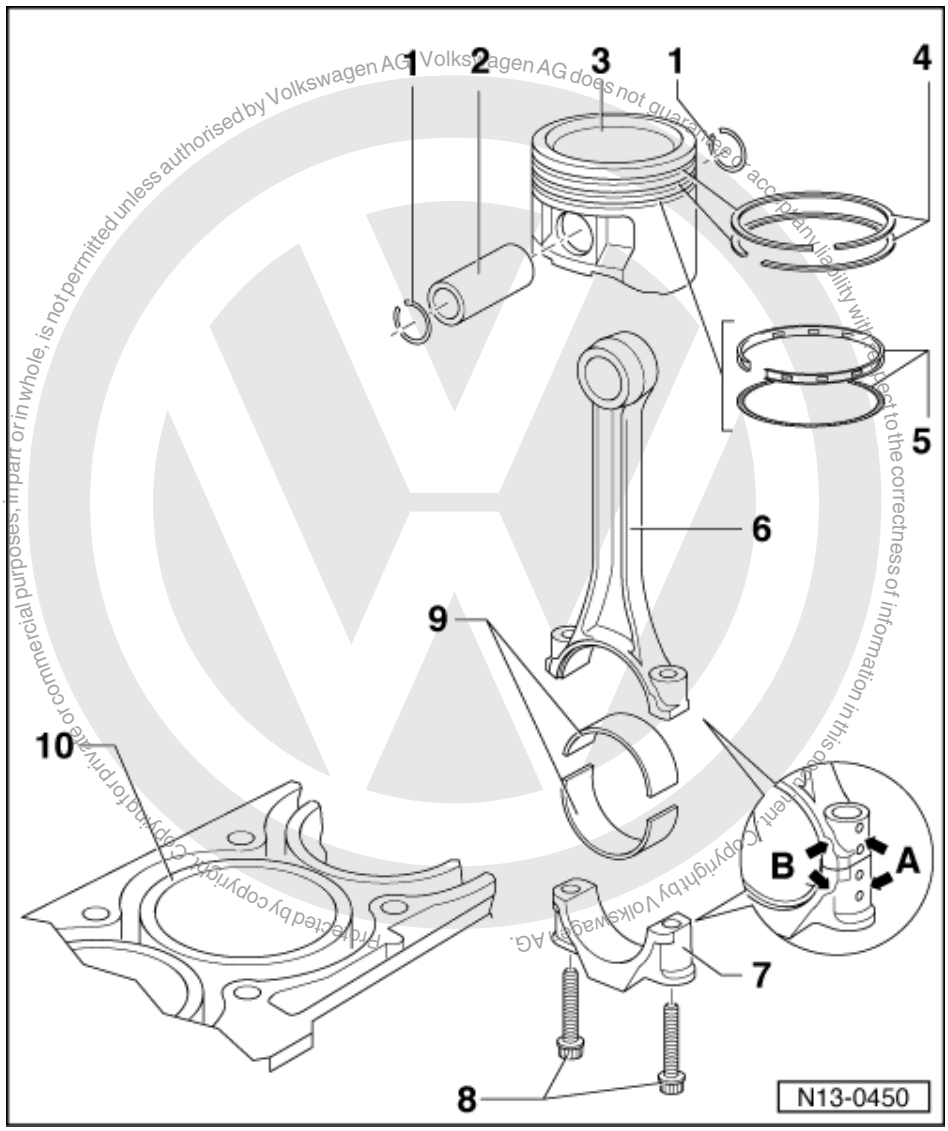

7 Conrod bearing cap
- The caps only fit in one position and only on the appropriate con-rod, this is due to the breaking procedure (cracking) separating the cap from the con-rod

8 Conrod bolt, 20 Nm + 1/4 turn (90 °) further
- Renew
- Oil threads and contact surface
- To measure radial clearance tighten to 20 Nm but not further

9 Bearing shell
- Do not interchange used bearing shells
- Insert bearing shells centrally
- Check radial clearance with Plastigage:
  New: 0.020...0.061 mm
  Wear limit: 0.091 mm
  Do not rotate crankshaft when checking radial clearance

satelettronica

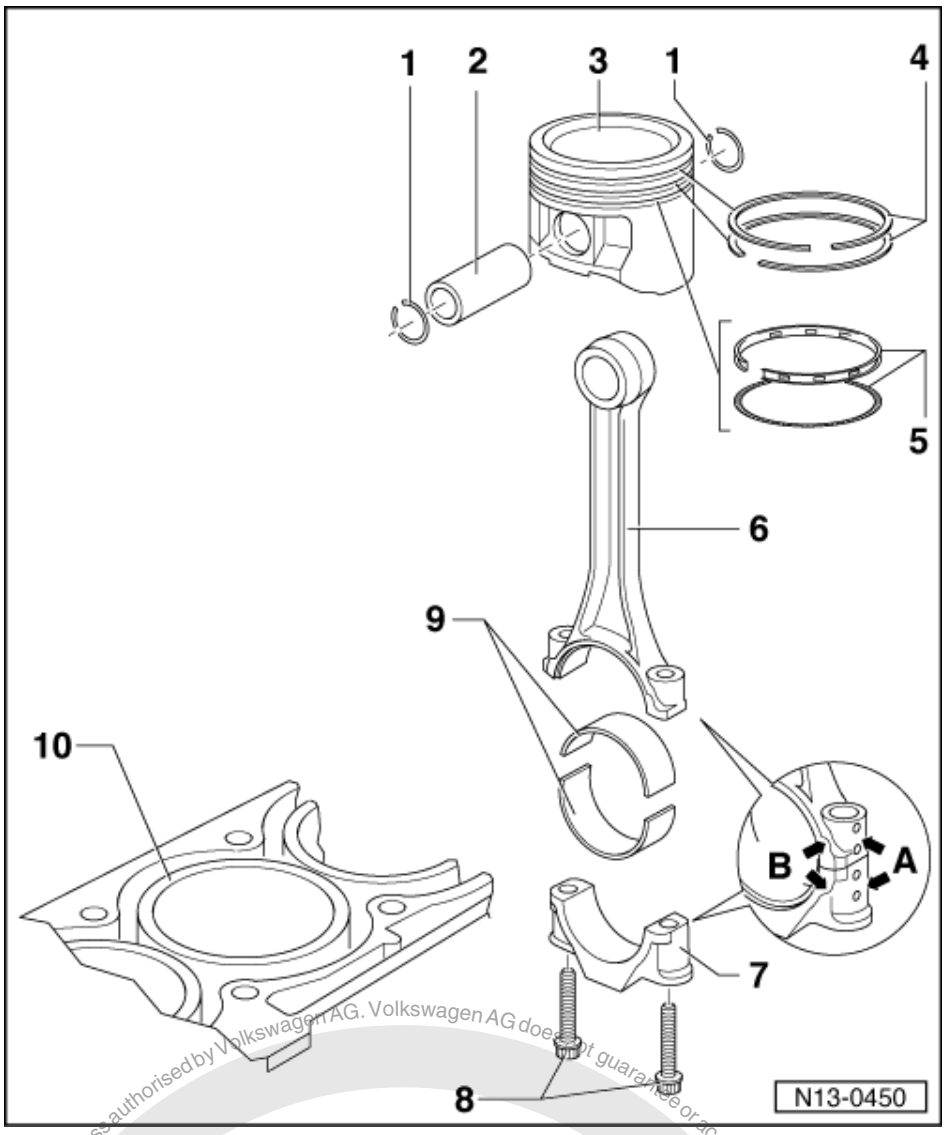

10 Cylinder block

- Checking cylinder bores
  =>Fig. 4
- Piston and cylinder dimensions
  =>Page 49

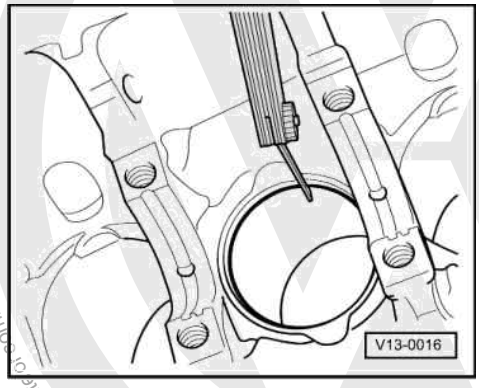

-> Fig. 1 Checking piston ring gap

- Push ring squarely from above down to approx. 15 mm from bottom end of cylinder.

Protected by copyright. Copying for private or commercial purposes, in part or in whole, is not permitted unless authorised by Volkswagen AG. Volkswagen AG does not guarantee or accept any liability with respect to the correctness of information in this document. Copyright by Volkswagen AG.

satelettronica

Piston ring	Wear limit
Compression rings	1.0 mm
Oil scraper ring	1.0 mm

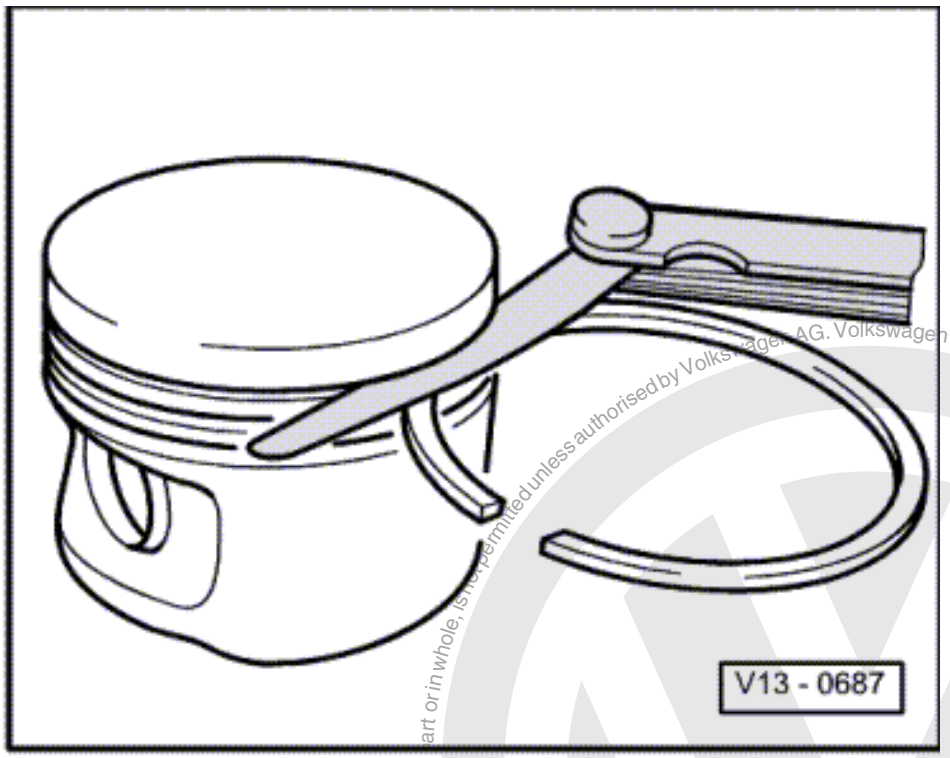

-> Fig. 2 Checking ring to groove clearance

Clean groove before check.

Piston ring	Wear limit
Compression rings	0.15 mm
Oil scraper ring	0.15 mm

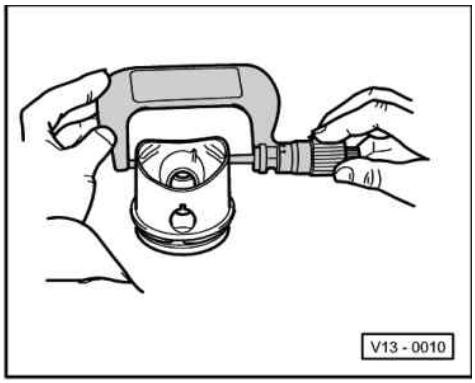

-> Fig. 3 Checking piston

Special tools, workshop equipment, testers, measuring instruments and auxiliary items required

- External micrometer 60...90 mm

Protected by copyright. Copying for private or commercial purposes, in part or in whole, is not permitted unless authorised by Volkswagen AG. Volkswagen AG does not guarantee or accept any liability with respect to the correctness of information in this document. Copyright by Volkswagen AG.
satelettronica

- Approx. 10 mm from lower edge and offset 90 ° to piston pin axis. Deviations from nominal dimensions max. 0.04 mm

  Nominal dimension => Page 49 ; Piston and cylinder dimensions

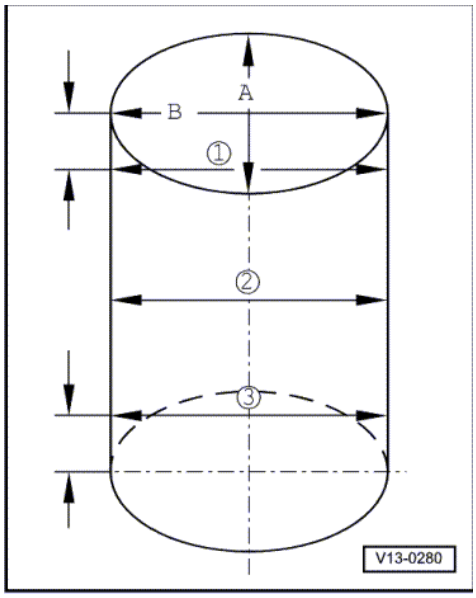

-> Fig. 4 Checking cylinder bores

Special tools, workshop equipment, testers, measuring instruments and auxiliary items required

- Internal dial gauge 50...100 mm

- Take measurements at 3 positions in both lateral -A- and longitudinal -B- directions, as illustrated. Deviation from nominal dimension max. 0.08 mm

  Nominal dimension => Page 49 ; Piston and cylinder dimensions

Note:

Measuring the cylinder bores must not be done when the cylinder block is mounted on a repair stand with adapter bracket VW 540, as incorrect measurements would then be possible.

3.2 - Piston and cylinder dimensions

Engine codes ALD and AUC

Honing dimension		Piston-ø	Cylinder bore-ø
Basic dimen.	mm	67.085	67.11
1st undersize	mm	67.335	67.36
2nd undersize	mm	67.585	67.61
3rd undersize	mm	67.835	67.86

1) The dimension details are for uncoated pistons. Pistons which are coated in area of measurements may, according to time run, be up to 0.030 mm larger in diameter.

satelettronica
Protected by copyright. Copyright by Volkswagen AG. Volkswagen AG does not guarantee or accept any liability with respect to the correctness of information in this document. Copyright by Volkswagen AG. Copying for private or commercial purposes, in part or in whole, is not permitted unless authorised by Volkswagen AG.

Engine codes AKK, AKP and AUD

Honing dimension		Piston-ø	Cylinder bore-ø
Basic dimen.	mm	76.475	76.51
1st undersize	mm	76.725	76.76
2nd undersize	mm	76.975	77.01

1) The dimension details are for uncoated pistons. Pistons which are coated in area of measurements may, according to time run, be up to 0.030 mm larger in diameter.

Protected by copyright. Copying for private or commercial purposes, in part or in whole, is not permitted unless authorised by Volkswagen AG. Volkswagen AG does not guarantee or accept any liability with respect to the correctness of information in this document. Copyright by Volkswagen AG.

satelettronica

15 - Cylinder head, Valve gear

1 - Removing and installing cylinder head

1.1 - Removing and installing cylinder head

Checking compressions=> Page 63

Notes:

- When installing an exchange cylinder head, all the contact surfaces between the support elements, roller rocker fingers and the cams must be oiled before installing the cylinder head cover.
- The plastic packing pieces for protecting the open valves must not be removed until immediately before fitting cylinder head.
- If the cylinder head is replaced, all the coolant in the system must also be renewed.
- Removing and installing intake manifold:

=> Repair group 24; Servicing injection system; Removing and installing parts of injection system Servicing injection system Removing and installing parts of injection system

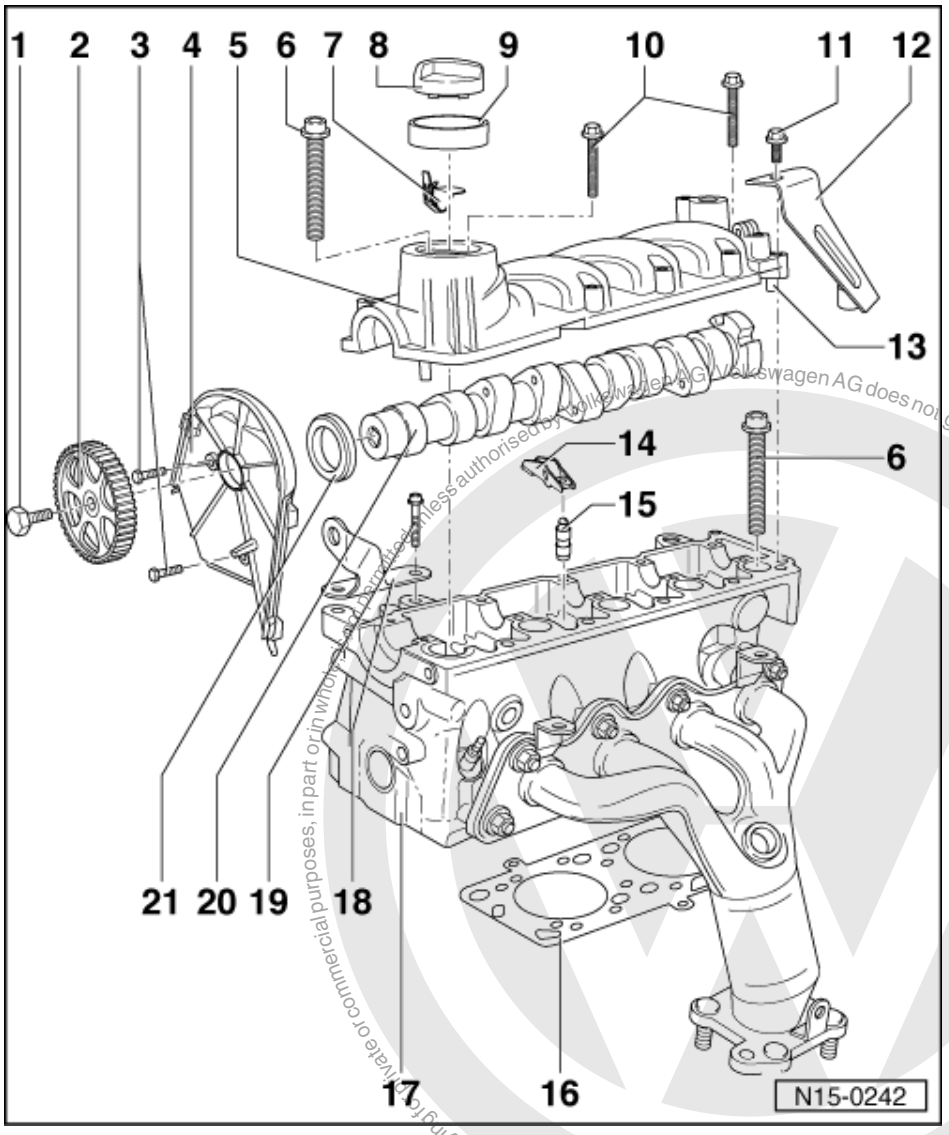

satelettronica
Protected by copyright. Copyright by Volkswagen AG. Volkswagen AG does not guarantee or accept any liability with respect to the correctness of information in this document. Copyright by Volkswagen AG. Reproduction, unless authorised by Volkswagen AG, for private or commercial purposes, in part or in whole, is not permitted.

1 20 Nm + 1/4 turn (90 °) further
- Hold with counter-hold 3036 to loosen and tighten the camshaft sprocket
- Renew

2 Camshaft sprocket
- When installing note fixing arrangement
- Note position when installing the toothed belt
  => Page 57

3 10 Nm
- Install with D6
- Renew

4 Rear toothed belt guard

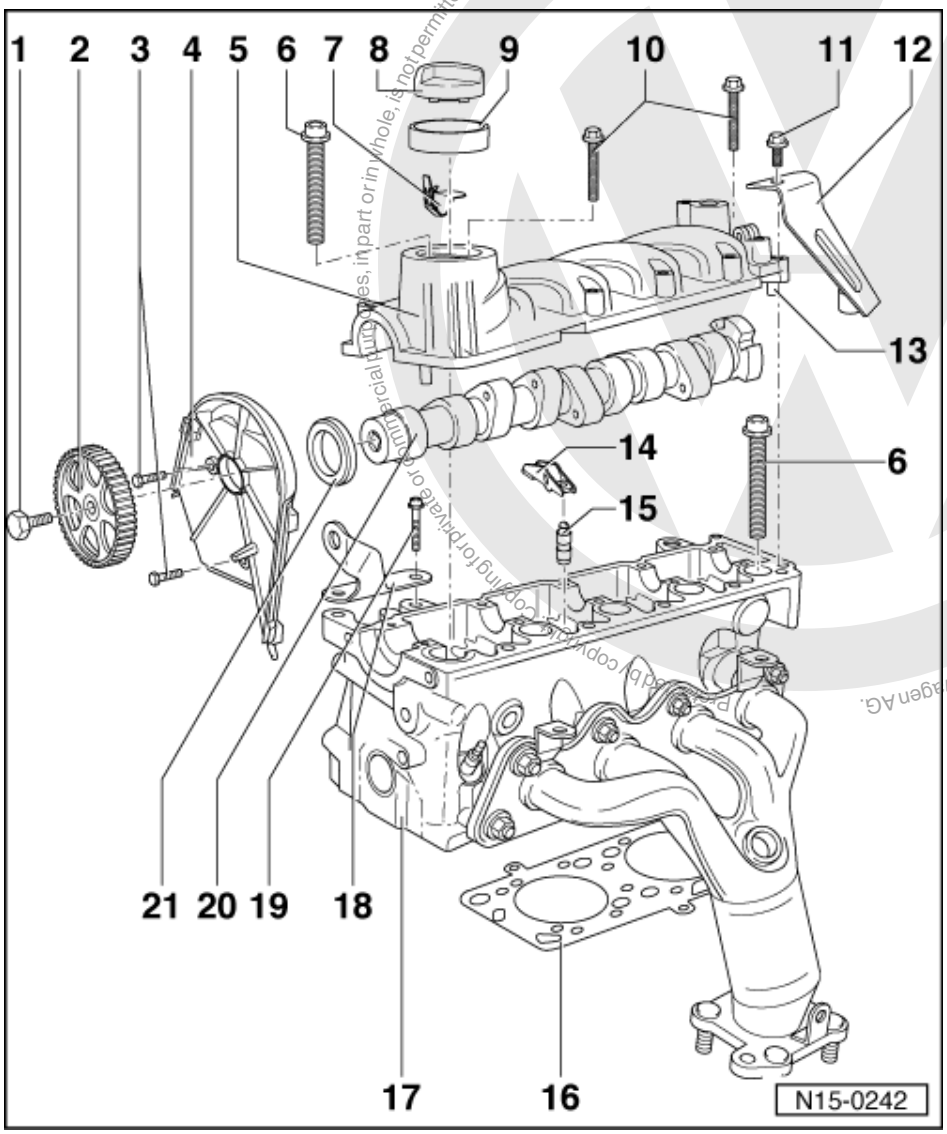

5 Cylinder head cover
- Sealing surface must not be treated
- With integrated camshaft bearings
- Removing and installing
  => Page 75
- Remove remnants of old sealant
- Coat with AMV 154 103 before fitting
- Install vertically from above with dowel pins in holes in cylinder head

6 Cylinder head bolt
- Renew
- Note installation instructions and sequence when loosening and tightening

Copyright by Volkswagen AG. Volkswagen AG does not guarantee or accept any liability with respect to the correctness of information in this document. Copyright by Volkswagen AG. Reproduced by copying for private or commercial purposes, in part or in whole, is not permitted unless authorised by Volkswagen AG.
satelettronica

=> Page 59

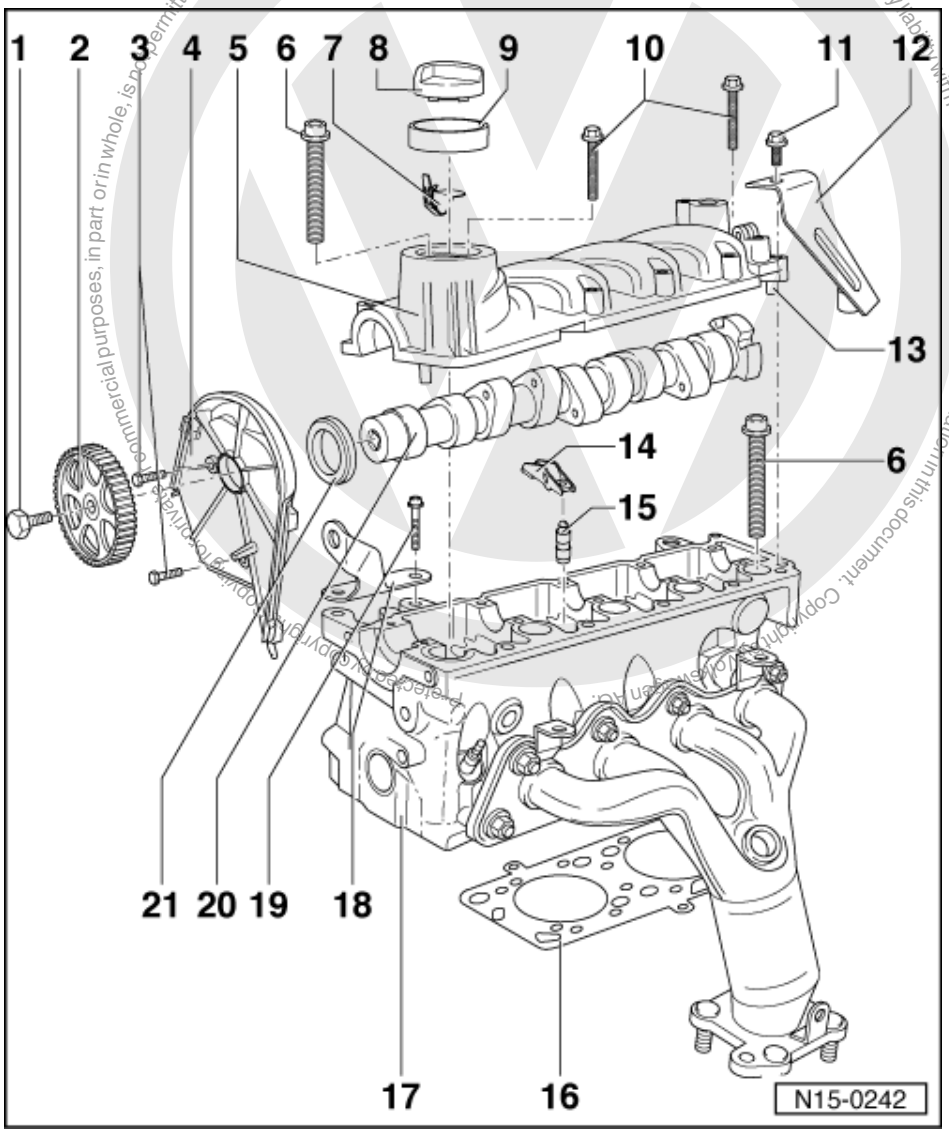

7 Screening cover
- Observe installation position
- Is clipped in or out

8 Cap
- Renew seal if damaged

9 Boot
- Renew if damaged

10 6 Nm + 1/4turn (90 °) further
- Renew
- Note installation instructions and sequence when loosening and tightening => Page 75

11 10 Nm

12 Bracket
- For wiring harness

13 Fitted pin

satelettronica

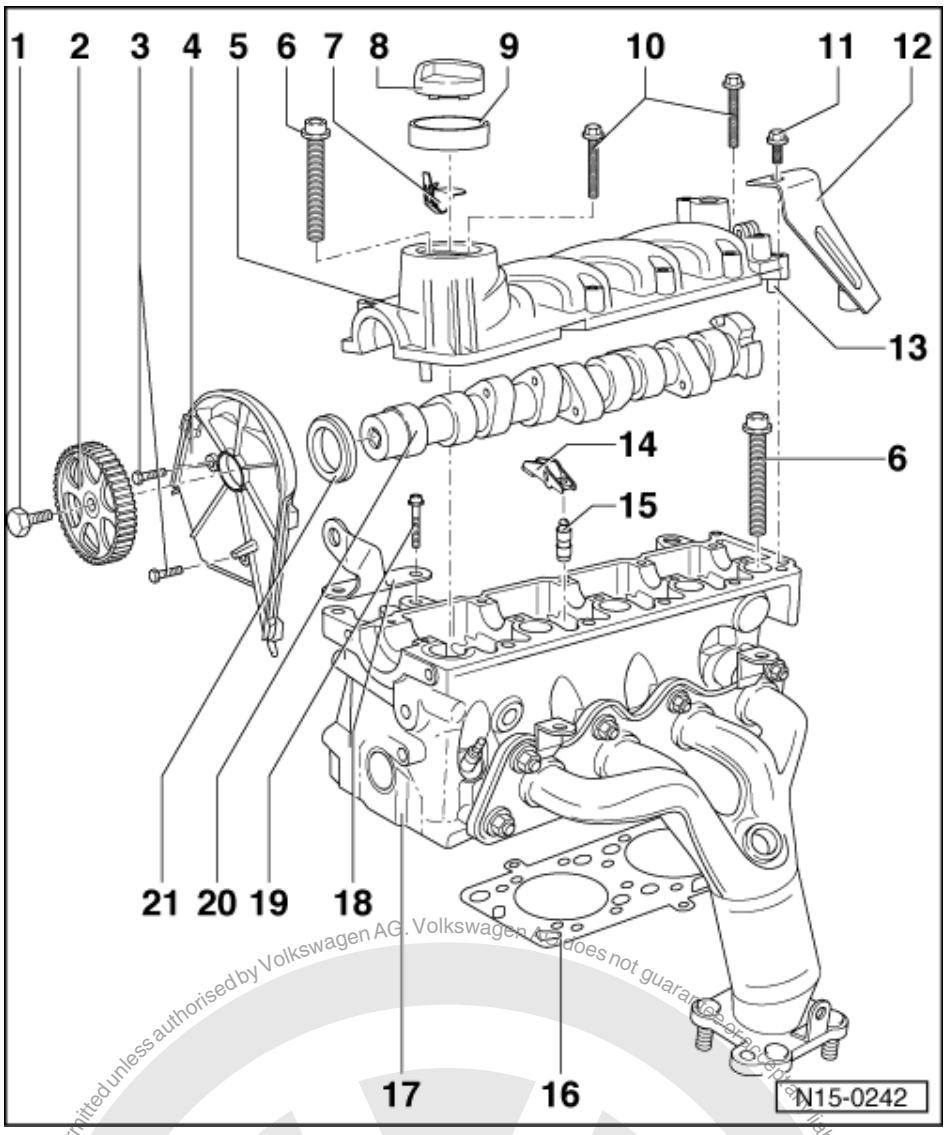

14 Roller rocker finger

- Check roller bearing
- Oil contact surface
- Use securing clip to clip onto support element when installing

15 Support element

- Do not interchange
- With hydraulic valve clearance compensation
- Oil contact surface

16 Cylinder head gasket

- Metal gasket
- Renew
- If replaced renew the complete coolant

17 Cylinder head

- Reworking of sealing surface on camshaft side not permissible
- Removing and installing
  => Page 59

Protected by copyright. Copying for private or commercial purposes, in part or in whole, is not permitted unless authorised by Volkswagen AG. Volkswagen AG does not guarantee or accept any liability with respect to the correctness of information in this document. Copyright by Volkswagen AG.

satelettronica

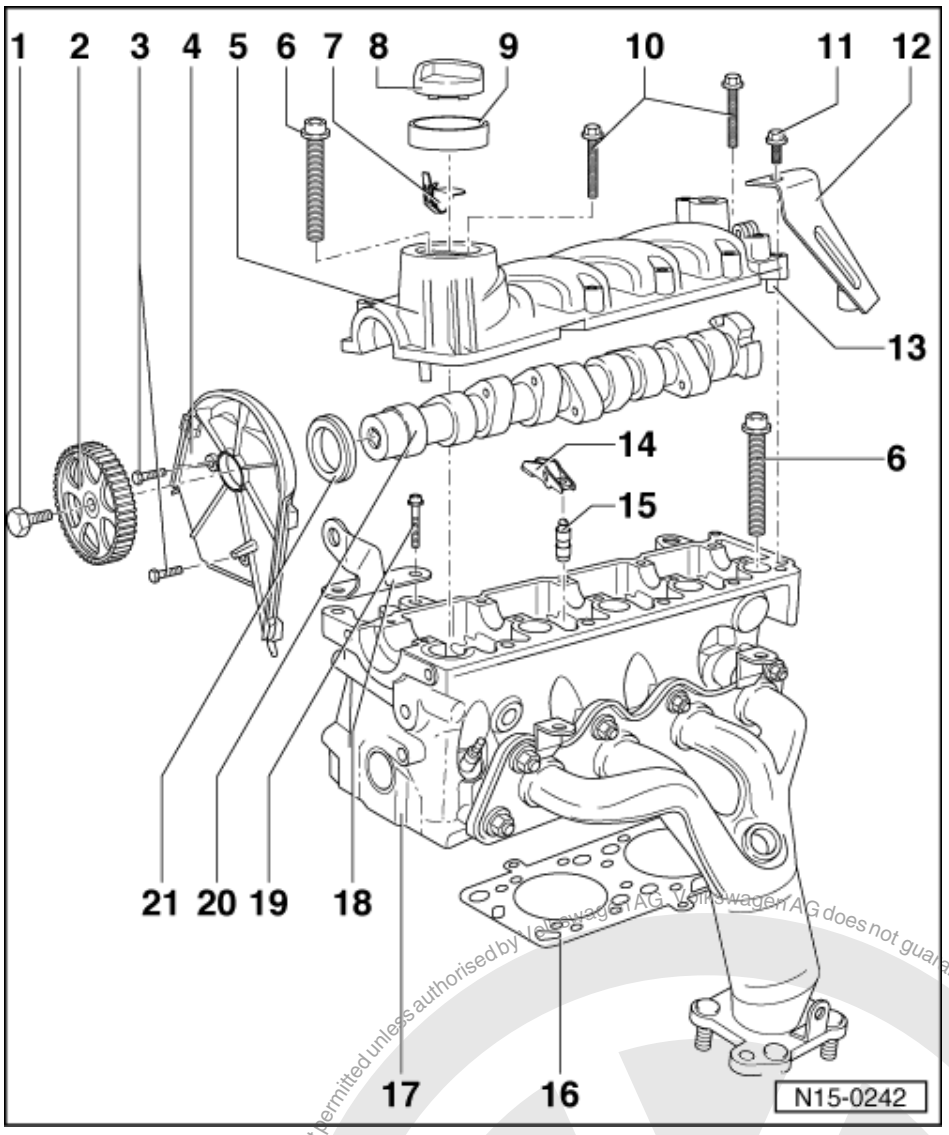

18 Lifting eye

19 20 Nm + 1/4 turn (90 °) further

- Renew

20 Camshaft

- => Page 65 , Servicing valve gear
- Removing and installing
  => Page 75

21 Oil seal

- Lightly oil sealing lip of oil seal
- Renew=> Page 73

satelettronica
Protected by copyright. Copying for private or commercial purposes, in part or in whole, is not permitted unless authorised by Volkswagen AG. Volkswagen AG does not guarantee or accept any liability with respect to the correctness of information in this document. Copyright by Volkswagen AG.

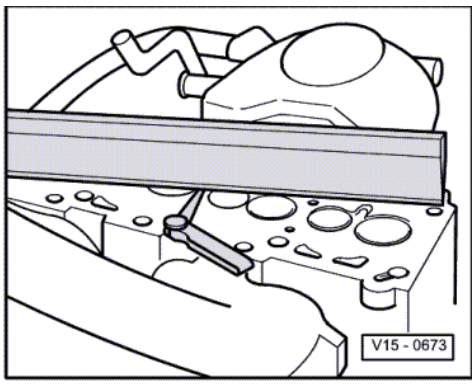

-> Fig. 1 Checking cylinder head for distortion

Max. permissible distortion: 0.05 mm

1.2 - Removing, installing and tensioning toothed belts

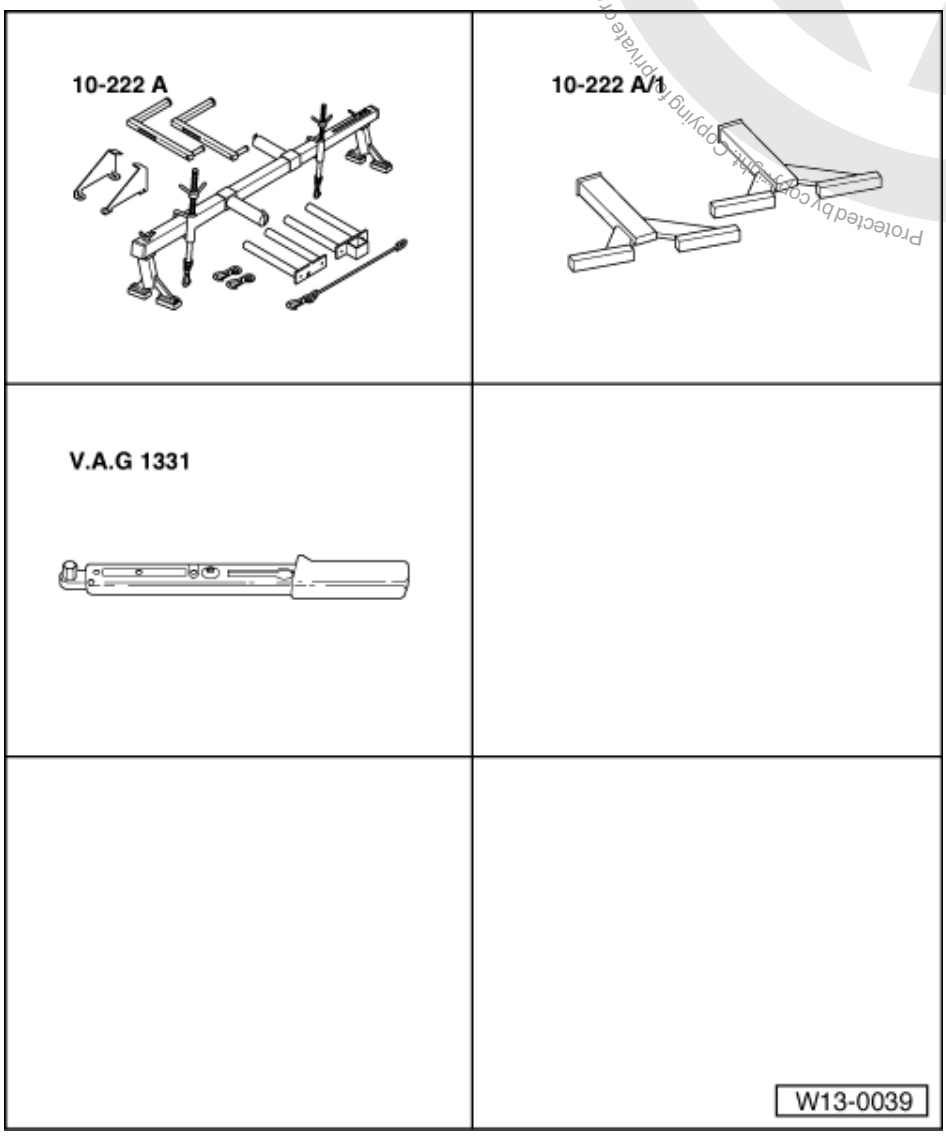

Protected by copyright. Copying for private or commercial purposes, in part or in whole, is not permitted unless authorised by Volkswagen AG. Volkswagen AG does not guarantee or accept any liability with respect to the correctness of information in this document. Copyright by Volkswagen AG.
satelettronica

(Adjusting valve timing)

Special tools, workshop equipment, test and measuring appliances and auxiliary items required

- 10-222A Support bracket
- 10-222A/1 Support for support bracket
- V.A.G 1331 Torque wrench (5...50 Nm)

Removing

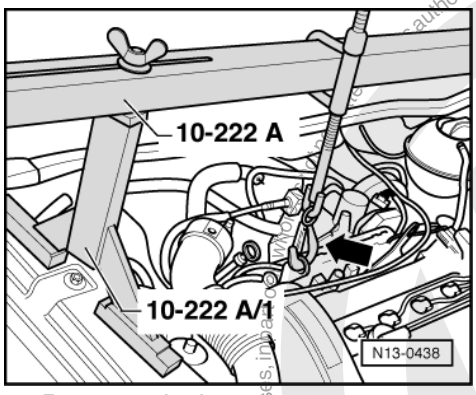

- Remove air cleaner.

=> Repair group 24; Servicing injection; Dismantling and assembling air cleaner Servicing injection Dismantling and assembling air cleaner

- -> Fit support 10-222A with legs 10-222A/1 as shown.
- Take-up weight of engine, and remove right engine mounting.
- Lower engine slightly.
- Remove ribbed belt => Page 20 .
- Remove belt pulley as well as upper and lower toothed belt guard.
- Mark D.O.R. of toothed belt.
- Release tensioner and take off toothed belt.

Installing

Prerequisites

- The engine must be no more than warm to touch.
- The pistons must not be positioned at TDC.

Note:

If a piston is at TDC the valves could strike the piston when turning the camshaft.

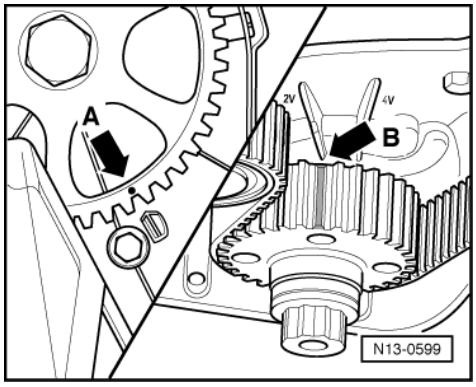

Protected by copyright. Copyright by Volkswagen AG. Volkswagen AG does not guarantee or accept any liability with respect to the correctness of information in this document. Copyright by Volkswagen AG. - authorised by Volkswagen AG
satelettronica

Protected by copyright. Copyright by Volkswagen AG. Volkswagen AG does not guarantee or accept any liability with respect to the correctness of information in this document. Copying or distribution, in whole or in part, is not permitted unless authorised by Volkswagen AG.

Work sequence

- -> Set camshaft sprocket to mark -arrow A-.
- Set crankshaft to TDC No. 1 cylinder. The ground tooth on the crankshaft toothed belt pulley must align with the marking -2V- on the sealing flange -arrow B-.
- Fit toothed belt. For used belts note direction of rotation.

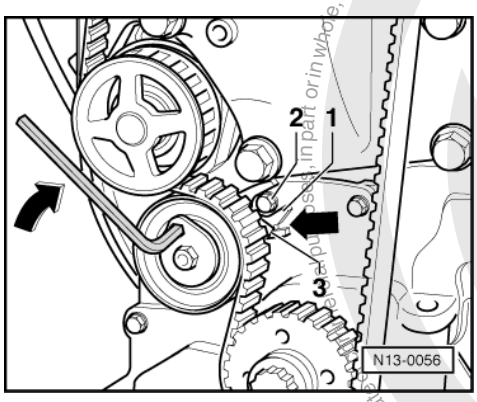

- -> Tighten tensioning roller securing bolt hand-tight. The slot in the base plate -1- must locate around securing bolt -2- .
- Tension toothed belt by turning the tensioning roller in direction of arrow until the indicator -3- aligns with the groove in the base plate -arrow-.
- Tighten clamping nut on tensioning roller.
  Tightening torque: 20 Nm

- Now turn the crankshaft two turns in engine direction of rotation until it is again at top dead centre No. 1 cylinder.
- Now the position of the toothed belts and tensioning roller must be checked again.
- Install toothed belt guard upper and lower parts.
- Install belt pulley (note fixing arrangement).
- Refit right engine mounting with new bolts => Page 10 , Engine assembly mounting.
- Refit the ribbed belt and the cover.

Note:

When installing the ribbed belt ensure that it sits correctly in the pulleys.

The rest of the assembly is basically a reverse of the dismantling sequence.

satelettronica

1.3 - Removing and installing cylinder head

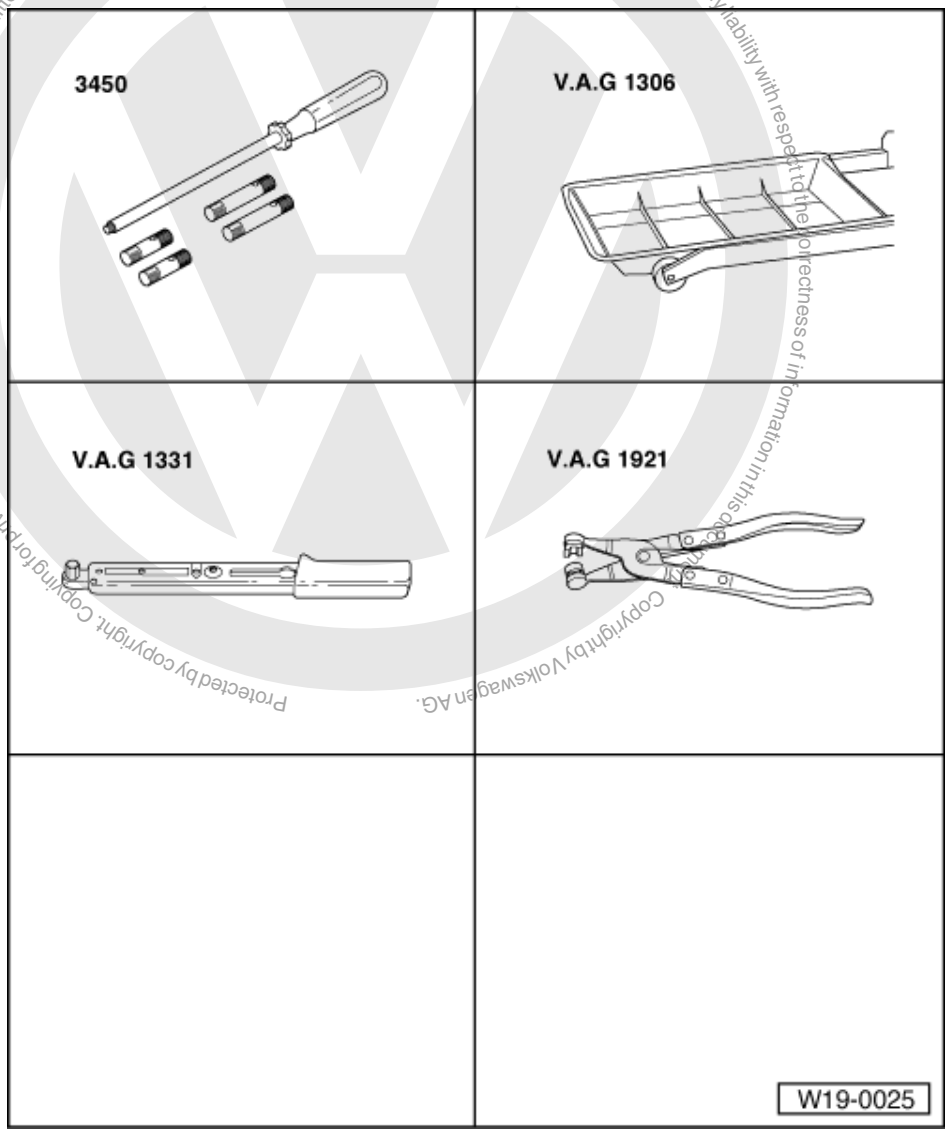

Special tools, workshop equipment, test and measuring appliances and auxiliary items required

- 3450 Guide pin
- V.A.G 1306 Drip tray
- V.A.G 1331 Torque wrench (5...50 Nm)
- V.A.G 1921 Pliers for spring-type clips or VAS 5024 assembly tool for spring-type clips

Prerequisites

- The engine must be no more than warm to touch.

Notes:

- When repairing an engine where it is not necessary to dismantle the cylinder head, the cylinder head can be removed without removing cylinder head cover or camshaft.
- Then start with work sequence 1.

If the cylinder head is to be dismantled
=> Work sequence 2 on Page 60 .

Protected by copyright. Copying for private or commercial purposes, in part or in whole, is not permitted unless authorised by Volkswagen AG. Volkswagen AG does not guarantee or accept any liability with respect to the correctness of information in this document. Copyright by Volkswagen AG.
satelettronica

Work sequence

- First check whether a coded radio is fitted. If this is the case obtain the anti-theft coding.
- With the ignition switched off disconnect the battery earth strap.
- Remove air cleaner:

=> Repair group 24; Servicing injection; Dismantling and assembling air cleaner Servicing injection Dismantling and assembling air cleaner

- Loosen toothed belt tensioning roller and remove toothed belt from camshaft sprocket. Description of work => Page 57 , Removing, installing and tensioning toothed belt.

- Open cylinder head cover sealing cap, unclip the screening cover and take it out.

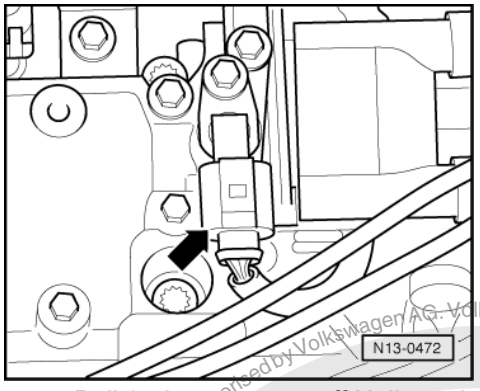

- -> Pull 3-pin connector off Hall sender -arrow-.
- Pull 4-pin connector off ignition transformer and remove ignition transformer.
- Further work necessary:
  => Work sequence 1 and 2 continued on this page.

Work sequence 2

- Remove cylinder head cover,
  => Page 75 .

Work sequence 1 and 2

- Lift engine slightly and refit the right engine mounting.

Warning!
Fuel supply lines are under pressure! Before removing from hose connection wrap a cloth around the connection. Then release pressure by carefully pulling hose off connection.

- Now separate fuel supply as well as fuel return pipes at connecting point on suspension strut.
- Seal the pipes so that the fuel system is not contaminated by dirt etc.
- Loosen or separate the following components:
  - The connector from coolant temperature sender and oil pressure switch
  - The collective connectors below thermostat housing
  - The engine speed sender connector
  - Lambda probe connector in exhaust manifold
  - Connector on knock sensor
  - Oil pressure switch connector
  - Exhaust gas recirculation valve connector (vehicles with EGR)

- Remove fuel rail with all injectors from cylinder head.

=> Repair group 24; Servicing injection system; Dismantling and assembling fuel rail with injectors Servicing injection system Dismantling and assembling fuel rail with injectors

- Drain coolant => Page 105 .
- Pull the clamps which secure the coolant pipe to coolant pump off the thermostat housing.
- Remove thermostat housing from cylinder head.

satelettronica

- Disconnect all other inter-connecting, coolant, vacuum and intake hoses from cylinder head.

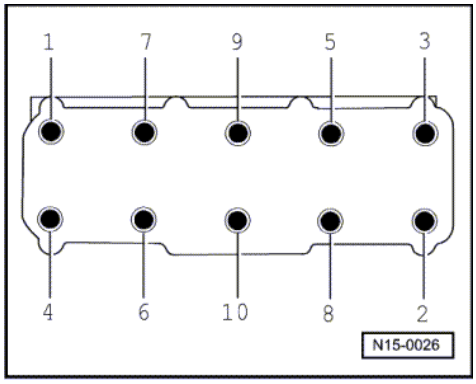

- Remove front exhaust pipe from exhaust manifold.
- Loosen dipstick guide pipe from cylinder head.
- Remove lifting eye in area of oil filler hole.
- -> Loosen socket head bolts in the sequence given and then remove completely.
- Carefully lift cylinder head off.

Installing

Notes:

- Only remove the new cylinder head gasket from its packing immediately before installing.
- Handle the new gasket with extreme care. Damaging will lead to leaks.

- Place a clean cloth in cylinders so that no dirt or emery cloth particles can get in between cylinder wall and piston.
- Also prevent dirt and emery cloth particles from getting into the coolant.
- Carefully clean cylinder head and cylinder block sealing surfaces. Thereby ensuring that no scoring or scratches are formed (when using abrasive paper the grade must not be less than 100).
- Carefully remove metal particles, emery remains and cloths.
- Set No. 1 cylinder piston to top dead centre and then turn crankshaft back slightly.

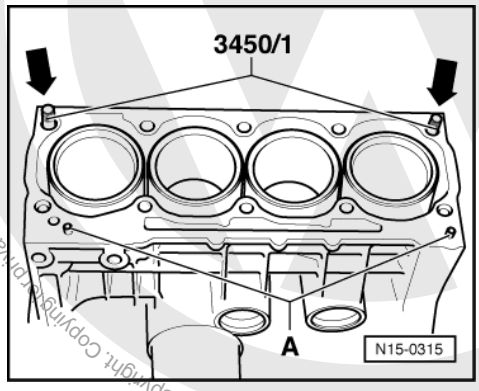

- -> To centralize cylinder head, screw guide pins from 3450/1 into holes for rear outer cylinder head bolts -arrows-.
- Place new cylinder head gasket on centralizing pins -A-. Lettering (Part No.) must be readable.
- Fit cylinder head, screw in 8 remaining cylinder head bolts and tighten by hand.
- Unscrew guide pins through bolt holes using pin driver from 3450. To do this turn pin driver anti-clockwise until the pins are free.
- Fit remaining cylinder head bolts and tighten hand-tight.

Protected by copyright. Copyright by Volkswagen AG. Copyright. Copying for private or commercial purposes, in part or in whole, is not permitted unless authorised by Volkswagen AG. Volkswagen AG does not guarantee or accept liability with respect to the correctness of information in this document.
satelettronica

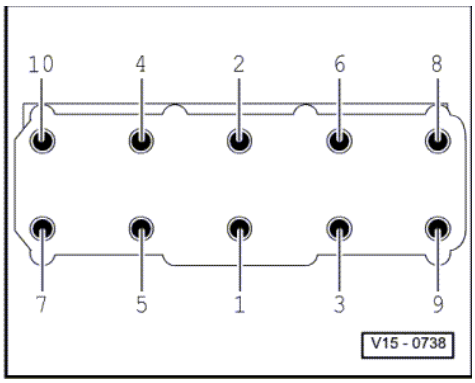

- -> Tighten cylinder head in tightening sequence as follows:
- Tighten all bolts to 30 Nm.
- Then tighten all bolts a 1/4 turn (90 °) further using a rigid wrench.
- Then tighten all bolts again a 1/4 turn (90 °) further.

The rest of the assembly is basically a reverse of the dismantling sequence.

Note:

When the camshaft is turned, the crankshaft must not be at TDC. Danger of damage to valves or piston crowns.

- Install camshaft and cylinder head cover (if necessary) => Page 76 .
- Install toothed belt and set valve timing => Page 57 .
- Filling with coolant => Page 105
- Perform the work sequence "Procedure after interrupting voltage supply".

=> Repair group 24; Engine control unit; Procedure after interrupting voltage supply. Engine control unit Procedure after interrupting voltage supply.

Note:

The readiness code is reset or erased each time fault memory is erased.

- Install air cleaner:

=> Repair group 24; Servicing injection system; Dismantling and assembling air cleaner. Servicing injection system Dismantling and assembling air cleaner.

Protected by copyright. Copyright for private or commercial purposes, in part or in whole, is not permitted unless authorised by Volkswagen AG. Volkswagen AG does not guarantee or accept any liability with respect to the correctness of information in this document. Copyright by Volkswagen AG.

satelettronica

1.4 - Checking compression pressures

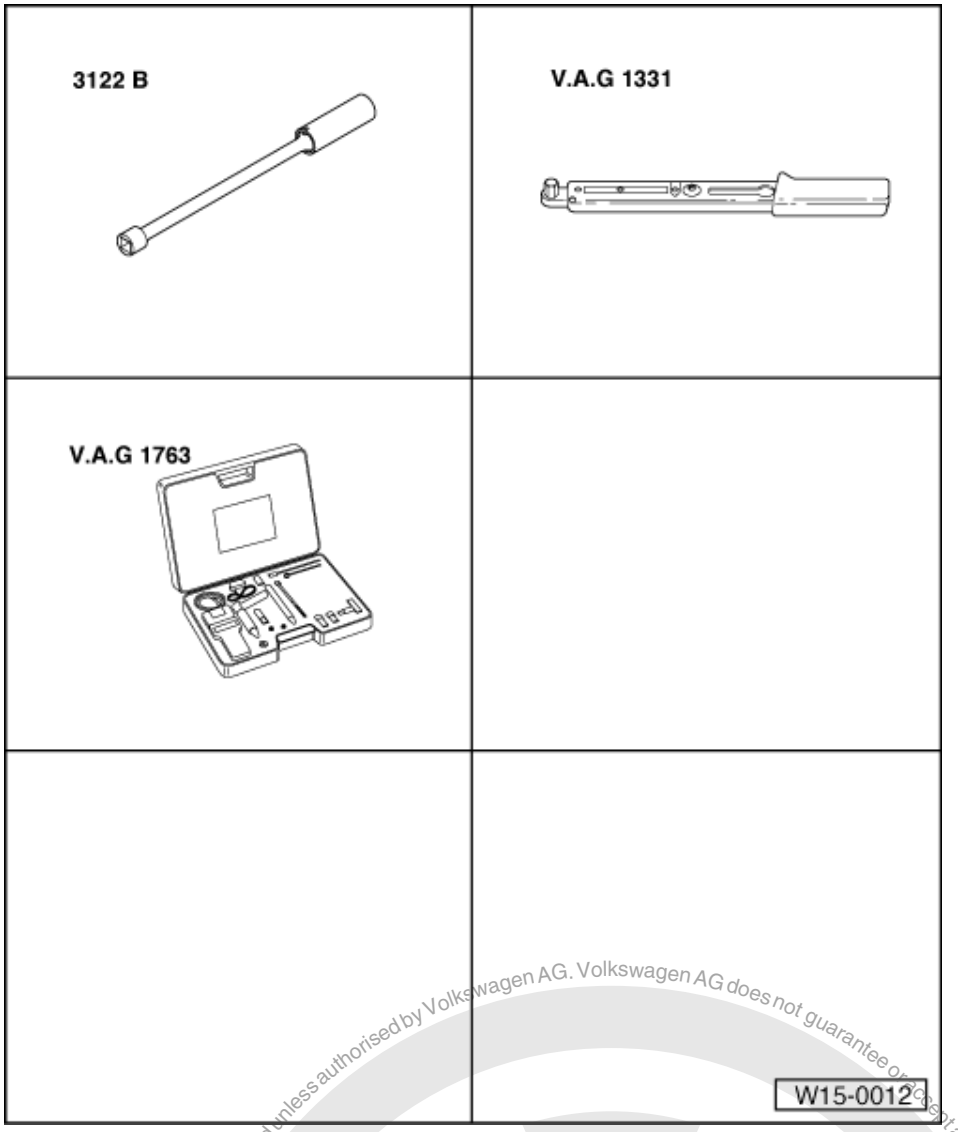

Special tools, workshop equipment, test and measuring appliances and auxiliary items required

- 3122 B Spark plug spanner
- V.A.G 1331 Torque wrench (5...50 Nm)
- V.A.G 1763 Compression tester

Test conditions

- Engine oil temperature must be at least 30 °C.

Work sequence

- Remove air cleaner:

=> Repair group 24; Servicing injection; Dismantling and assembling air cleaner Servicing injection Dismantling and assembling air cleaner

satelettronica
Protected by copyright. Copying for private or commercial purposes, in part or in whole, is not permitted unless authorised by Volkswagen AG. Volkswagen AG does not guarantee or assume any liability with respect to the correctness of information in this document. Copyright by Volkswagen AG.

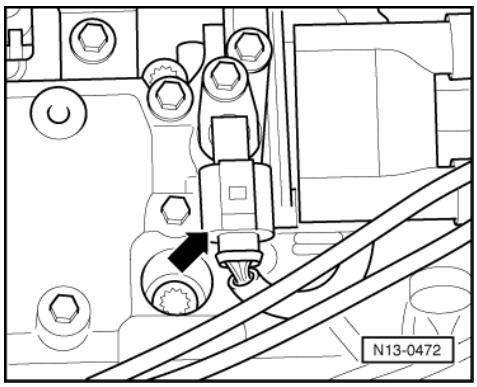

- Remove spark plugs with spark plug spanner 3122B.
- -> Pull connector off Hall sender.
- Remove fuse 40 for fuel pump.
- Use a second mechanic to depress the accelerator so that the throttle valve is fully open.
- Check compressions with compression tester V.A.G 1381 or V.A.G 1763.

Note:

See relevant test unit operating instructions for instructions on how to use test unit.

- Operate starter until tester shows no further pressure increase.

Compression pressure:

New: 10...15 bar
Wear limit: 7 bar

Permissible difference between all cylinders: 3 bar

- Insert spark plugs with spark plug spanner 3122B and tighten to 30 Nm.
- Interrogate fault memory:

=> Repair group 01; Fault memory; Interrogating and erasing fault memory Fault memory Interrogating and erasing fault memory

Protected by copyright. Copyright by Volkswagen AG.
Copyright by Volkswagen AG. Volkswagen AG does not guarantee or accept any liability with respect to the correctness of information in this document. Copying for private or commercial purposes, in part or in whole, is not permitted unless authorised by Volkswagen AG.
satelettronica

2 - Servicing valve gear

2.1 - Servicing valve gear

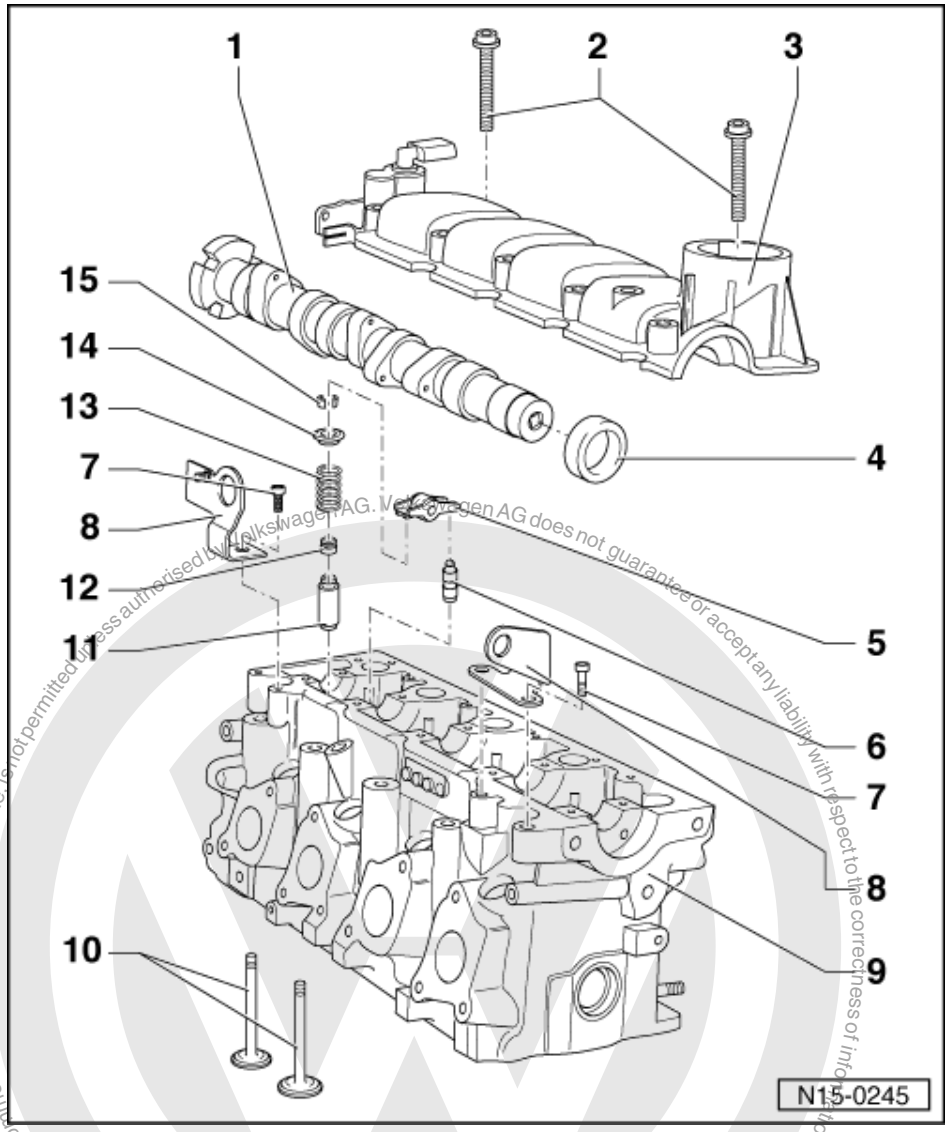

Note:

Cylinder heads which have cracks between the valve seats or between valve seat inserts and the spark plug thread can be used further without reducing service life, provided the cracks do not exceed a maximum of 0.5 mm in width, or when no more than the first turns of the spark plug thread are cracked.

1 Camshaft

- Checking axial clearance
  => Page 69
- Removing and installing
  => Page 75
- Checking radial clearance with plastigage
  Wear limit: 0.1 mm
- Run-out: max. 0.05 mm
- Identification and valve timing
  => Page 70 , Fig. 2

satelettronica

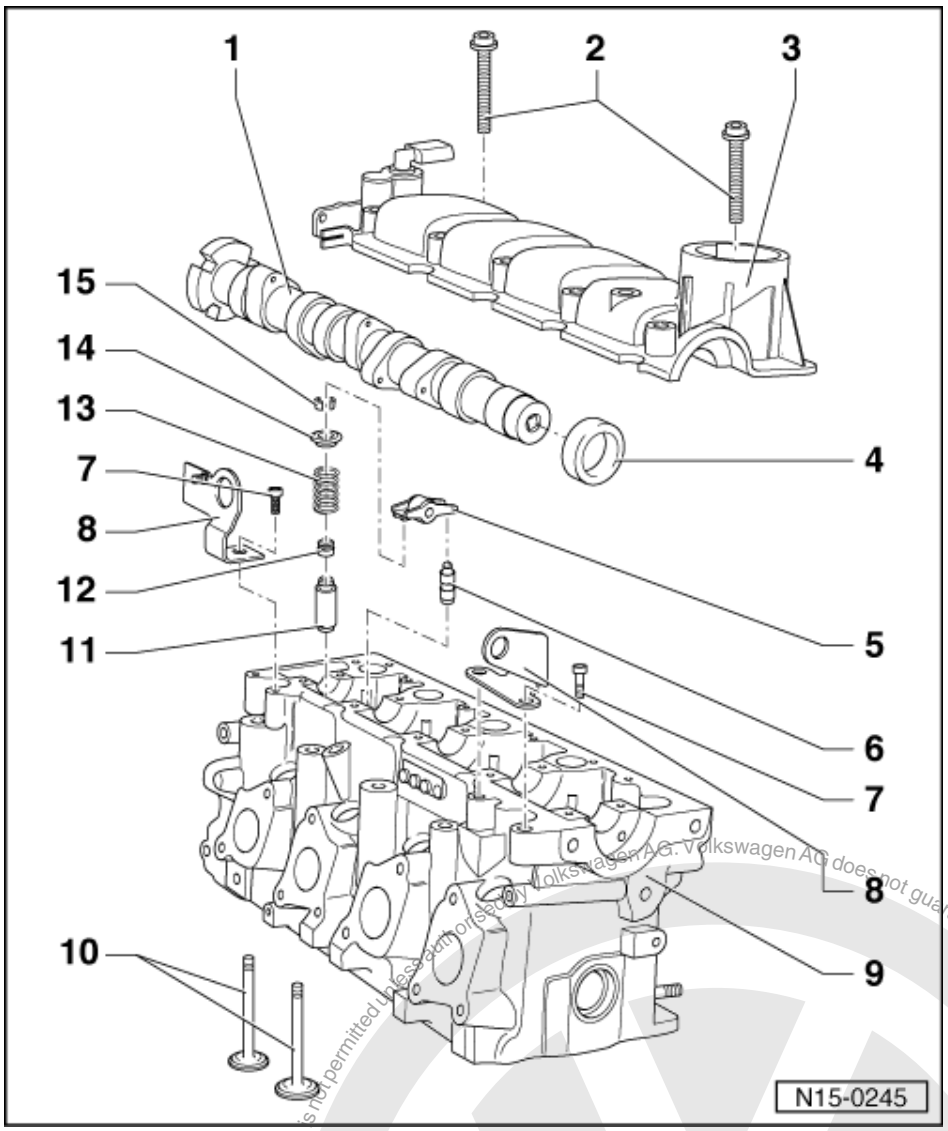

2 6 Nm + 1/4turn (90 °) further
- Renew
- Note installation instructions and sequence when loosening and tightening => Page 75

3 Cylinder head cover
- Reworking the sealing surface is not permitted
- With integrated camshaft bearings
- Removing and installing
  => Page 75
- Remove remnants of old sealant
- Coat with AMV 154 103 before fitting
- Install vertically from above with dowel pins in holes in cylinder head

4 Oil seal
- Lightly oil sealing lip of oil seal
- Renew=> Page 73

satelettronica
Protected by copyright. Copying for private or commercial purposes, in part or in whole, is not permitted unless authorised by Volkswagen AG. Volkswagen AG does not guarantee or accept any liability with respect to the correctness of information in this document. Copyright by Volkswagen AG.

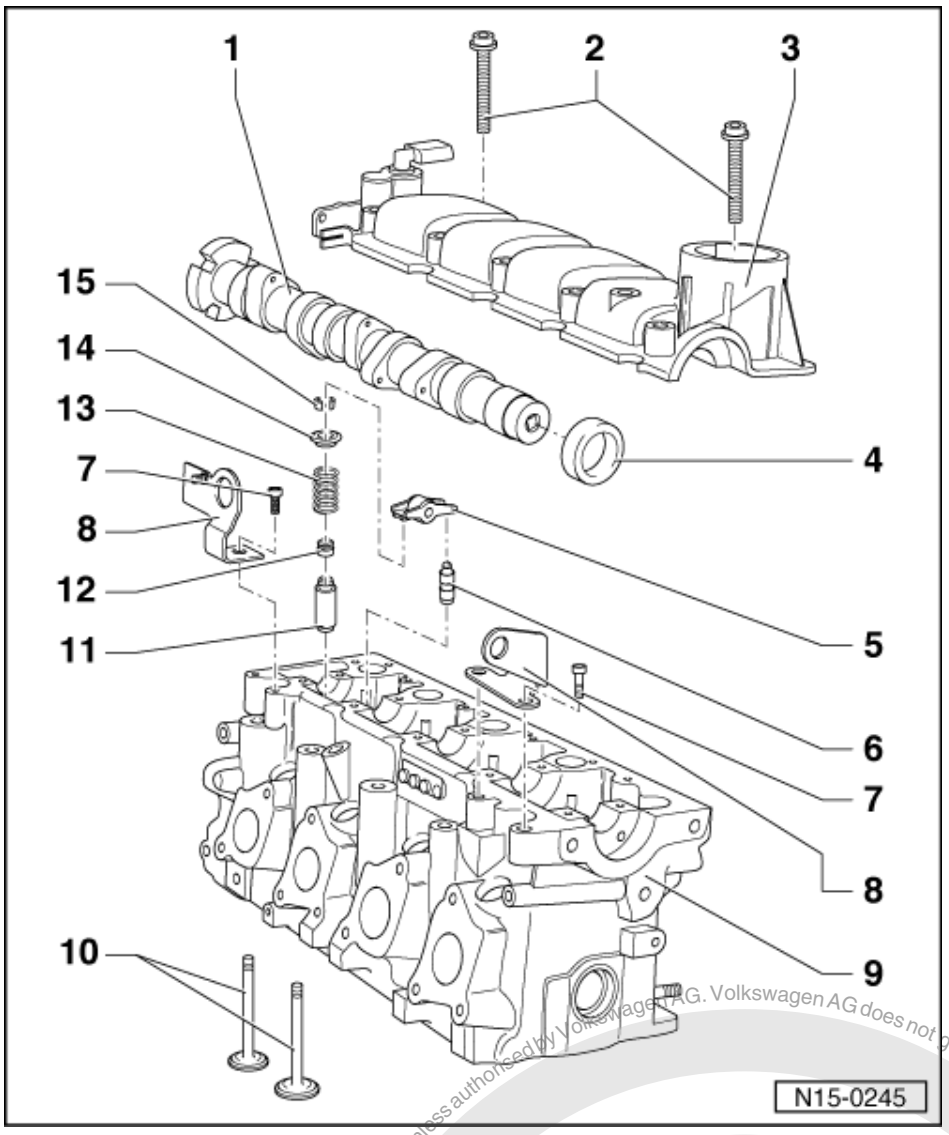

5 Roller rocker finger
- Check roller bearing
- Oil contact surface
- Use securing clip to clip onto support element when installing

6 Support element
- Do not interchange
- With hydraulic valve clearance compensation
- Oil contact surface

7 20 Nm + 1/4 turn (90 °) further
- Renew

8 Bracket/lifting eye

9 Cylinder head
- Reworking of camshaft side sealing surface is not permitted
- Reworking valve seats
  => Page 71
- Reworking sealing surface, cylinder block side => Fig. 1

Protected by copyright. Copying for private or commercial purposes, in part or in whole, is not permitted unless authorised by Volkswagen AG. Volkswagen AG does not guarantee or accept any liability with respect to the correctness of information in this document. Copyright by Volkswagen AG.
satelettronica

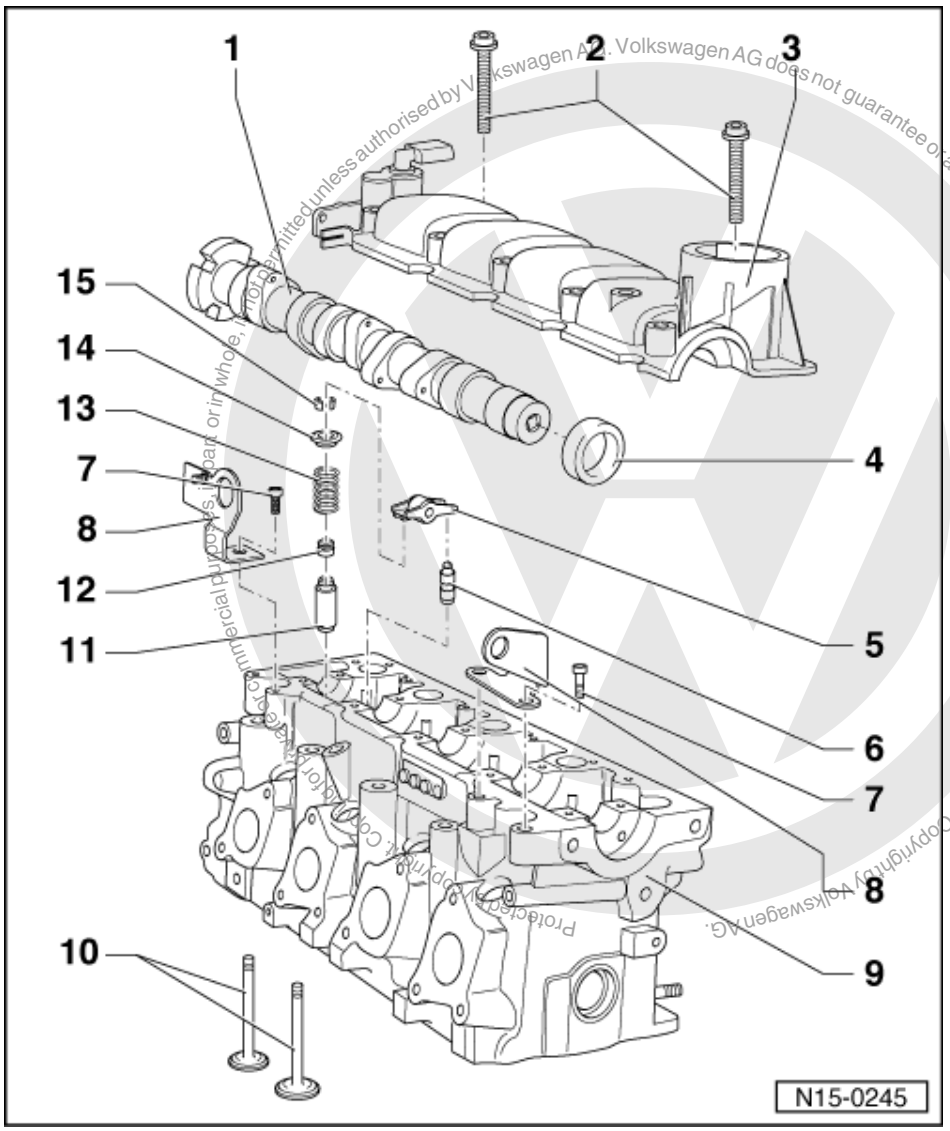

Volkswagen AG. Volkswagen AG does not guarantee or accept any liability with respect to the correctness of information in this document. Copyright by Volkswagen AG.
Protected by copyright. Copying for private or commercial purposes, in part or in whole, is not permitted unless authorised by Volkswagen AG.

10 Valves

- Do not rework only grinding-in is permitted
- Valve dimensions => Fig. 3

11 Valve guide

- Checking => Page 78
- Repair valve guide has a collar

12 Valve stem seal

- Renewing=> Page 80

13 Valve spring

- Removing and installing:
  Cylinder head
  removed: with 2037
  installed: => Page 80 , renewing valve stem seals

14 Upper valve spring plate

15 Cotters

satelettronica

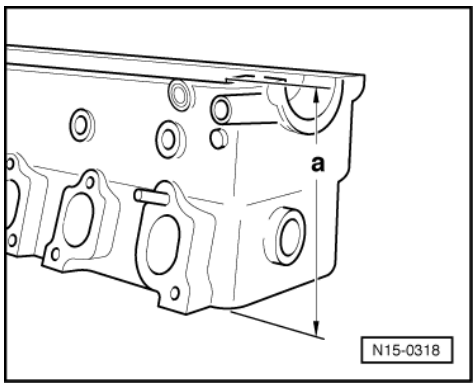

-> Fig. 1 Reworking cylinder head sealing surface, cylinder block side

Cylinder head reworking dimension:
a = At least 135.6 mm

Checking camshaft axial clearance

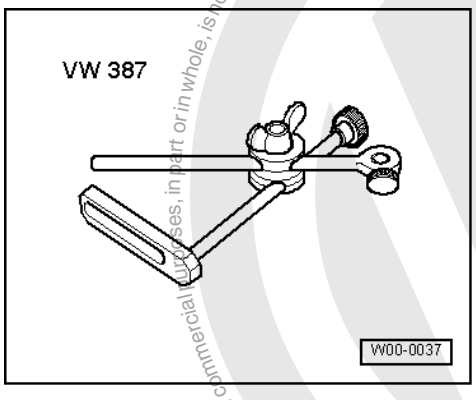

Special tools, workshop equipment, testers, measuring instruments and auxiliary items required

- -> VW 387 Universal dial gauge bracket
- Dial gauge

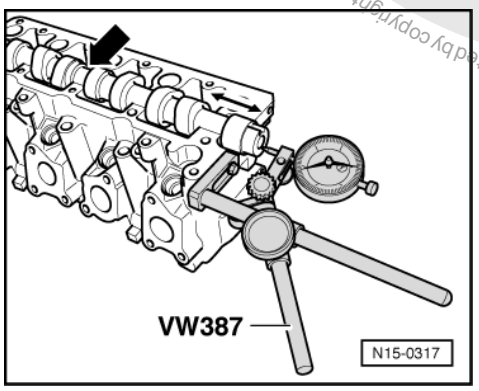

- -> Checking camshaft axial clearance

Check with support elements and cylinder head cover removed.

- Pull camshaft seal off with 3364. Pre-load camshaft at centre bearing -arrow- using thumb pressure and check axial clearance by moving camshaft to and fro.

Protected by copyright. Copyright by Volkswagen AG. Volkswagen AG does not guarantee or accept any liability with respect to the correctness of information in this document. Copyright by Volkswagen AG. Reproduction for commercial purposes, in part or in whole, is not permitted unless authorised by Volkswagen AG.
satelettronica

Wear limit: max. 0.15 mm

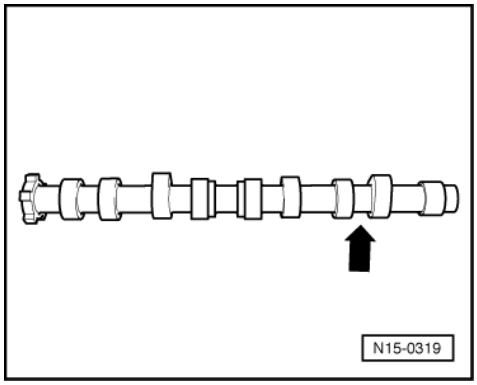

-> Fig.2 Camshaft identification, valve timing

Marking between number 1 cylinder inlet and exhaust cam tabs	
Engine codes ALD, AUC	"030 BP"
Engine codes AKK, AKP, AUD	"030 BQ"

Valve timing at 1 mm valve lift

Engine code	ALD, AUC	AKK, AKP, AUD
Inlet opens after TDC	9.9°	15°
Inlet closes after BDC	28.9°	22.4°
Exhaust opens before BDC	30.1°	16.7°
Exhaust closes before TDC	11.1°	9.3°

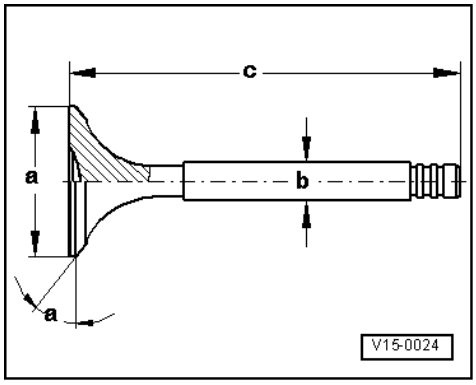

-> Fig. 3 Valve dimensions

Note:

Valves must not be reworked. Only lapping-in is permitted.

Engine codes ALD and AUC

Dimension	Inlet valve	Exhaust valve
øa mm	31.0	26.0

Protected by copyright. Copying for private or commercial purposes, in part or in whole, is not permitted unless authorised by Volkswagen AG. Volkswagen AG does not guarantee or accept any liability with respect to the correctness of information in this document. Copyright by Volkswagen AG.
satelettronica

Dimension		Inlet valve	Exhaust valve
øb	mm	5.98	5.96
c	mm	99.00	99.00
α	<°	45	45

Engine codes AKK, AKP and AUD

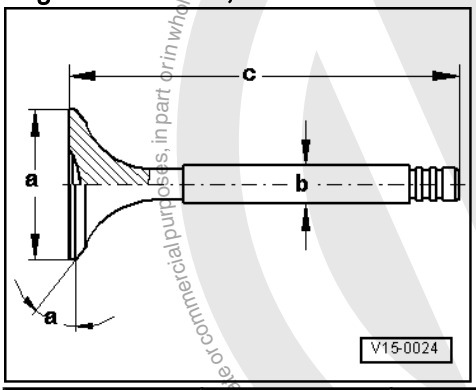

Dimension		Inlet valve	Exhaust valve
øa	mm	33.5	28.0
øb	mm	5.98	5.96
c	mm	99.20	99.20
α	<°	45	45

2.2 - Reworking valve seats

Special tools, workshop equipment, testers, measuring instruments and auxiliary items required

- Depth gauge
- Valve seat refacing tool

Notes:

- When repairing engines with leaking valves, it is not sufficient to replace or renew valve seats and valves. It is also necessary to check the valve guides for wear. This particularly important on high mileage engines => Page 78 .
- The valve seats should only be reworked just enough to produce a perfect seating pattern. The maximum permissible reworking dimension must be calculated before work is carried out. If the reworking dimension is exceeded, the function of the hydraulic tappets can no longer be guaranteed and therefore the cylinder head should be renewed.

The max. permissible reworking dimension is calculated as follows:

- Insert valve and press firmly against seat.

Note:

If the valve is to be renewed as part of a repair, use a new valve for the calculation.

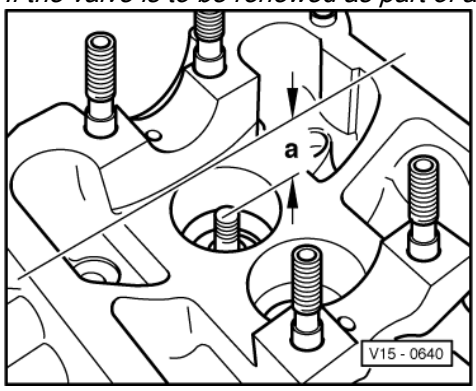

Protected by Copyright. Copyright by Volkswagen AG. Volkswagen AG does not guarantee or accept any liability with respect to the correctness of information in this document. Copyright by Volkswagen AG. Reproduction or commercial purposes, in part or in whole, is not permitted unless authorised by Volkswagen AG.
satelettronica

- -> Measure distance -a- between end of valve stem and upper edge of cylinder head.
- Calculate max. permissible reworking dimension from measured distance and minimum dimension.

Minimum dimension:
Inlet valve and outlet valve 32.1 mm

Measured distance minus minimum dimension
= max. permissible reworking dimension.

Example:

- Measured gap	32.5	mm
Minimum dimension	32.1	mm
= Max. permissible reworking dimension*	0.4	mm

*) The max. permissible reworking dimension is shown on illustrations for reworking valve seats as dimension "b".

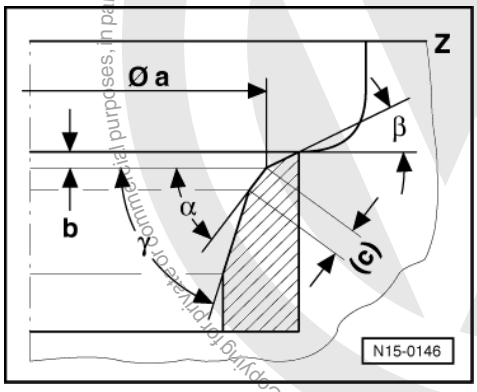

-> Reworking inlet valve seat

a	= ø29.4 mm - ALD, AUC
b	= ø 31.9 mm - AKK, AKP, AUD
c	= max. permissible reworking dimension*
Z	= max. 1.8 ... 2.0 mm
α	= Lower edge of cylinder head
β	= 45°valve seat angle
γ	= 30°upper correction angle
	= 60°lower correction angle

Note:

Valve seat rings having restrictor may only be reworked so far that the restrictor is not damaged.

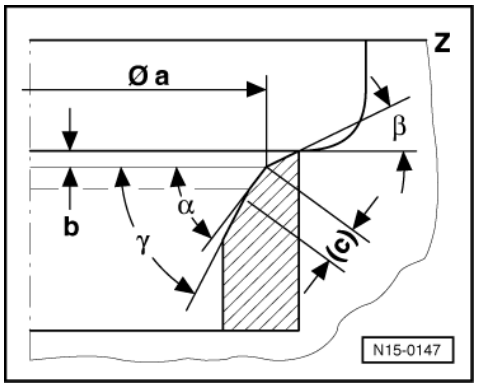

Protected by copyright. Copying for private or commercial purposes, in part or in whole, is not permitted unless authorised by Volkswagen AG. Volkswagen AG does not guarantee or accept any liability with respect to the correctness of information in this document. Copyright by Volkswagen AG.
satelettronica

-> Reworking exhaust valve seat

a = ø24.6 mm - ALD, AUC
b = ø 26.6 mm - AKK, AKP, AUD
c = max. permissible reworking dimension*
Z = max. 1.8 ... 2.0 mm
α = Lower edge of cylinder head
β = 45°valve seat angle
γ = 30°upper correction angle
= 60°lower correction angle

2.3 - Replacing camshaft oil seal

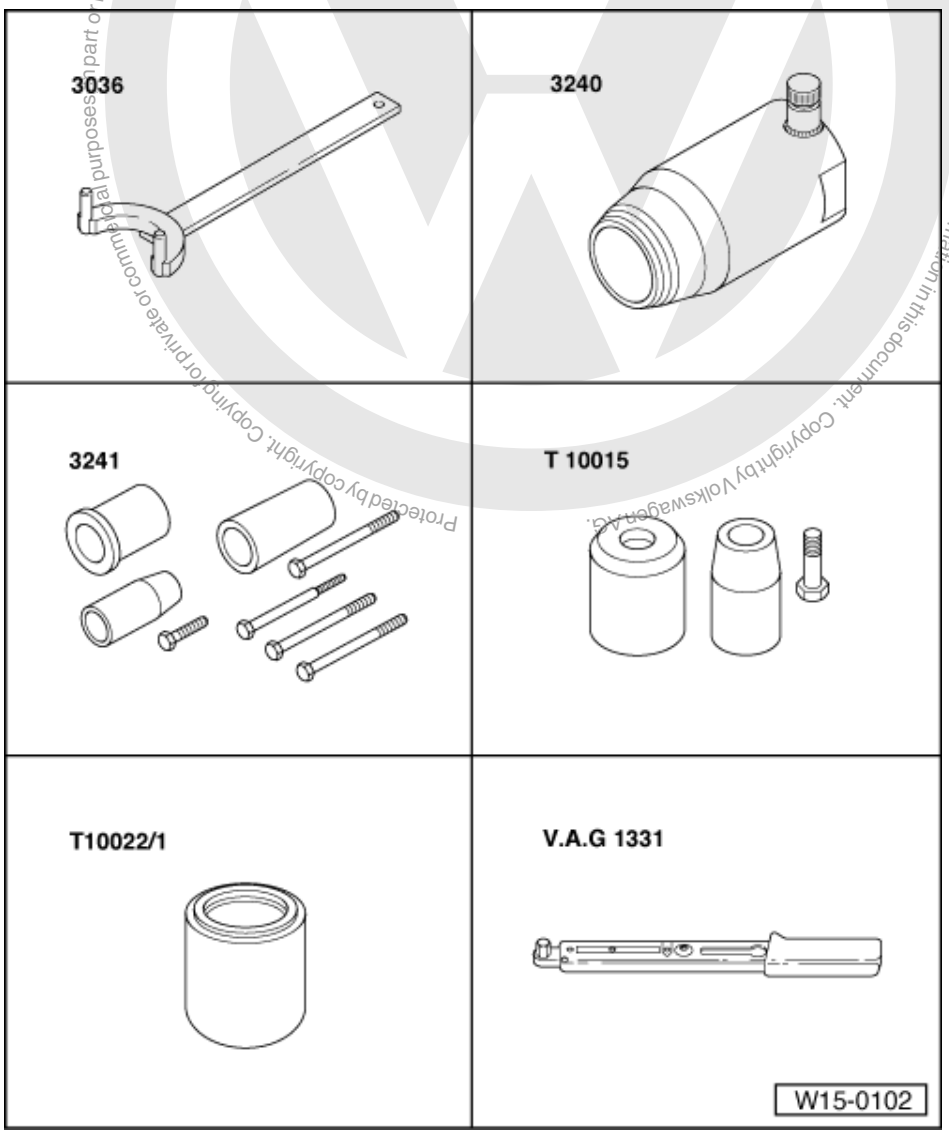

Special tools, workshop equipment, test and measuring appliances and auxiliary items required

- 3036 Counter hold tool
- 3240 Oil seal extractor
- 3241 Fitting sleeves
- T10015/3 Fitting sleeve bolt
- T10022/1 Press piece

Protected by copyright. Copying for private or commercial purposes, in part or in whole, is not permitted unless authorised by Volkswagen AG. Volkswagen AG does not guarantee or accept any liability with respect to the correctness of information in this document. Copyright by Volkswagen AG.
satelettronica

- V.A.G 1331 Torque wrench (5...50 Nm)

Removing

- Remove toothed belt guard - upper part.
- Release toothed belt tensioning device and remove toothed belt from camshaft sprocket, =>Page 57 , Removing, installing and tensioning toothed belt.
- Turn crankshaft back slightly.
- Remove camshaft sprocket. When loosening camshaft sprocket bolt counter-hold with 3036.
- Remove rear toothed belt guard.
- Screw camshaft sprocket securing bolt into camshaft onto stop by hand, to guide seal extractor.

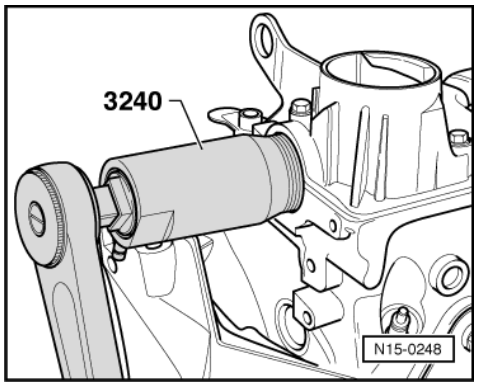

- Unscrew inner part of oil seal extractor 3240 two turns (approx. 3 mm) out of the outer part and lock with knurled screw.
- -> Lubricate threaded head of oil seal extractor, place it in position and exerting firm pressure screw it into oil seal as far as possible.
- Loosen knurled screw and turn inner part of extractor against camshaft until oil seal has been extracted.

- Remove camshaft sprocket securing screw.

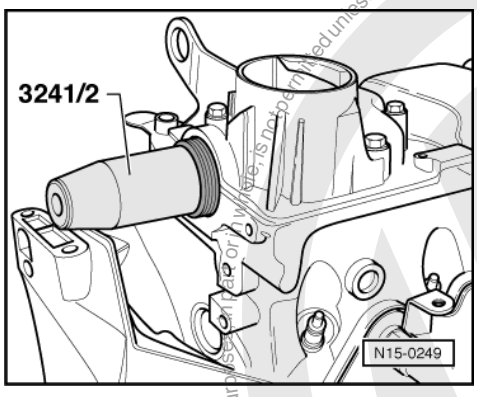

Installing

- Lightly oil sealing lip of oil seal.
- -> Fit guide sleeve 3241/2 onto camshaft journal.
- Slide oil seal over guide sleeve.
- Remove guide sleeve.

Protected by copyright. Copying for private or commercial purposes, in part or in whole, is not permitted unless authorised by Volkswagen AG. Volkswagen AG does not guarantee or accept any liability with respect to the correctness of information in this document. Copyright by Volkswagen AG.
satelettronica

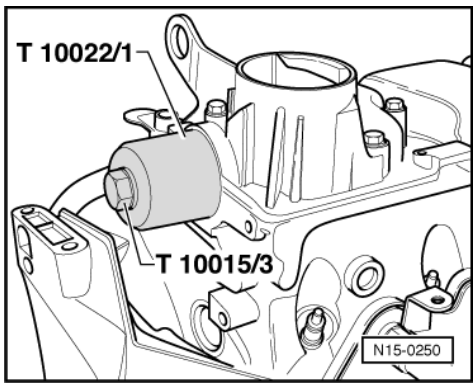

- -> Press oil seal with press piece T10022/1 and bolt from T10015/3 in onto stop. Place washer between press sleeve and hexagon head bolt.
- Install camshaft sprocket and tighten new bolt (use counter-hold tool 3036).
  Tightening torque:
  20 Nm and 1/4turn (90 °) further.

The rest of the assembly is basically a reverse of the dismantling sequence.

Installing toothed belt and adjusting timing => Page 57 .

2.4 - Removing and installing cylinder head cover and camshaft

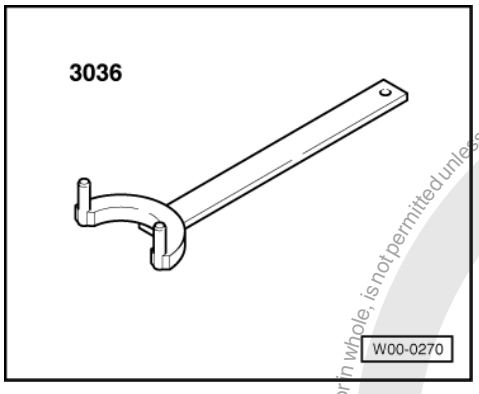

Special tools, workshop equipment, testers, measuring instruments and auxiliary items required

- 3036 Counter-hold

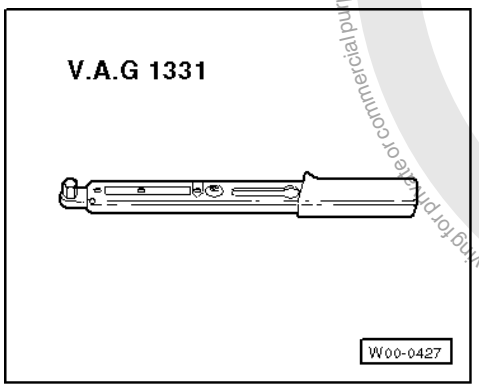

- V.A.G 1331 Torque wrench (5...50 Nm)
- AMV 154 103 Sealant

Protected by copyright. Copying for private or commercial purposes, in part or in whole, is not permitted unless authorised by Volkswagen AG. Volkswagen AG does not guarantee or accept any liability with respect to the correctness of information in this document. Copyright by Volkswagen AG.
satelettronica

Removing

Notes:

- The sealing surfaces on cylinder head cover and cylinder head must not be reworked.

- In this cylinder head the camshaft bearings are integrated into the cylinder head and cylinder head cover. Before removing cylinder head cover, the toothed belt tension must be relieved.
- If the cylinder head cover has been loosened, replace camshaft oil seal.

Work sequence

- First check whether a coded radio is fitted. If this is the case obtain the anti-theft coding.
- With the ignition switched off disconnect the battery earth strap.
- Loosen toothed belt tensioning roller and remove toothed belt from camshaft sprocket. Description of work => Page 57 , Removing, installing and tensioning toothed belt.
- Remove camshaft sprocket. When loosening camshaft sprocket bolt counter-hold with 3036.
- Remove rear toothed belt guard.
- Unscrew ignition transformer screws out of cylinder head cover.

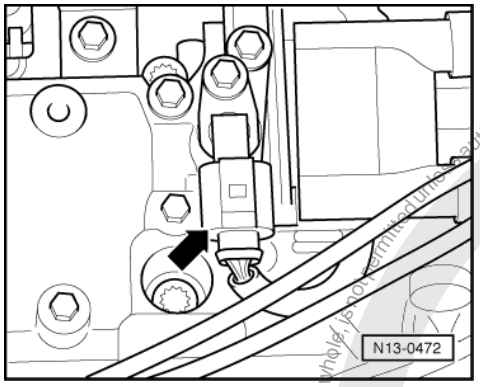

- -> Pull 3-pin connector off Hall sender -arrow-.
- Open cylinder head cover sealing cap and unclip screening cover and remove.

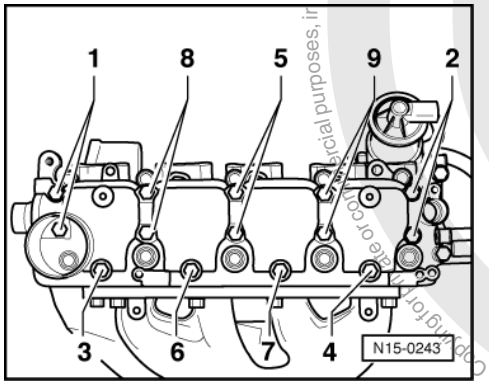

- -> Remove cylinder head cover bolts in the sequence prescribed and loosen items 8 and 9 using diagonally and alternating sequence.
- Carefully remove cylinder head cover.
- Lift camshaft carefully, remove and place on a clean surface.
- Remove roller rocker finger together with support elements and place on a clean surface.
- Ensure the roller rocker fingers and the support elements are not interchanged.

Installing

Prerequisites

- Prevent dirt and sealant remnants from entering cylinder head.
- Sealing surfaces must be free of oil and grease.
- When installing cylinder head cover or camshaft, the cams for Cyl. 1 must face upwards.

Protected by copyright. Copying for private or commercial purposes, in part or in whole, is not permitted unless authorised by Volkswagen AG. Volkswagen AG does not guarantee or accept any liability with respect to the correctness of information in this document. Copyright by Volkswagen AG.
satelettronica

Protected by copyright. Copyright by Volkswagen AG. Volkswagen AG does not guarantee or accept any liability with respect to the correctness of information in this document. Copyright by Volkswagen AG. Reproduction, distribution or disclosure to third parties without express written authority, is not permitted unless authorised by Volkswagen AG.

- The pistons must not be positioned at TDC.

- Remove sealant remnants on cylinder head and camshaft housing with a commercially available sealant remover.

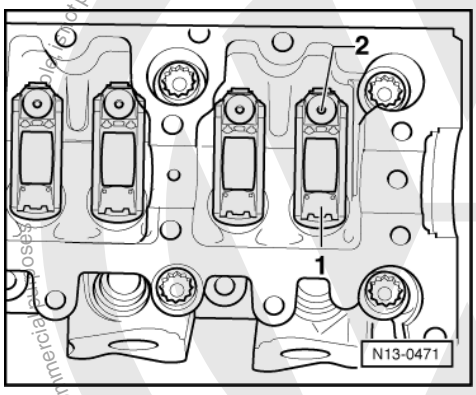

- Oil the camshaft contact surfaces.
- Insert support element in cylinder head and fit roller rocker finger onto respective valve stem end and support element.
- -> Ensure all roller rocker fingers contact the valve ends -1- correctly and they are clipped into their respective support elements -2-.

- Carefully place camshaft in camshaft bearing of cylinder head.

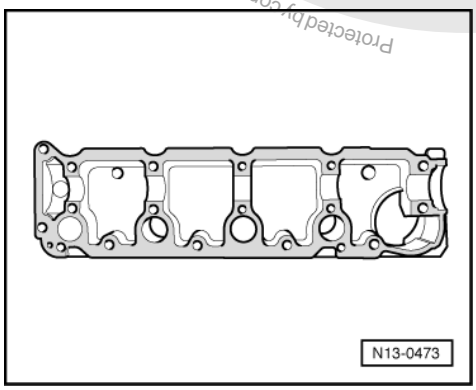

- -> Apply a thin even coat of sealant onto the clean cylinder head cover sealing surface.

Note:

The sealant must not be applied too thick, otherwise excess sealant can enter the oil channels or camshaft bearing and cause damage to the engine.

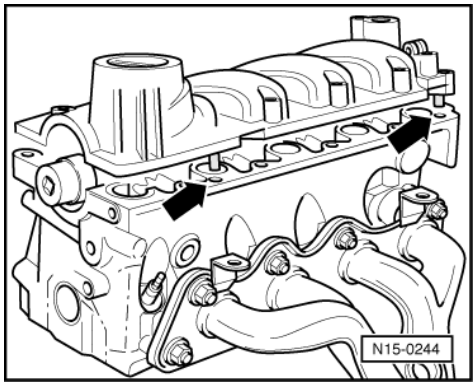

- -> Install the cylinder head cover carefully from above ensuring that the dowel pins fit in holes -arrows- in the cylinder head.

satelettronica

Notes:

- Positioning and securing the cylinder head cover must be completed without interruption, as the sealing surfaces start to cure immediately they have contact.
- The cylinder head cover bolts must be replaced.

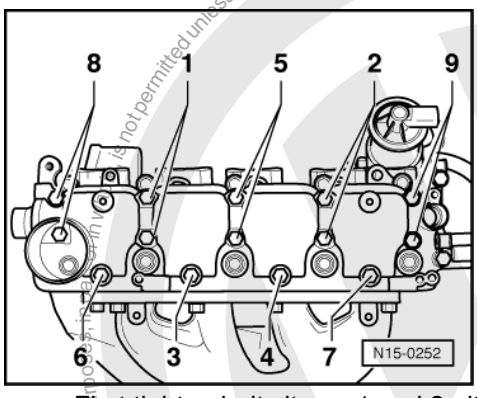

- -> First tighten bolts items 1 and 2 alternately using diagonal sequence and tighten to 6 Nm.
- Then tighten the other bolts to 6 Nm in sequence prescribed.
- Then tighten all bolts a 1/4 turn (90 °) further.

Note:

Sealant must be left dry for approx. 30 minutes after installing cylinder head cover.

- Install new oil seal in camshaft,
  => Page 73 .

The rest of the assembly is basically a reverse of the dismantling sequence.

Installing toothed belt and adjusting timing => Page 57 .

2.5 - Checking valve guides

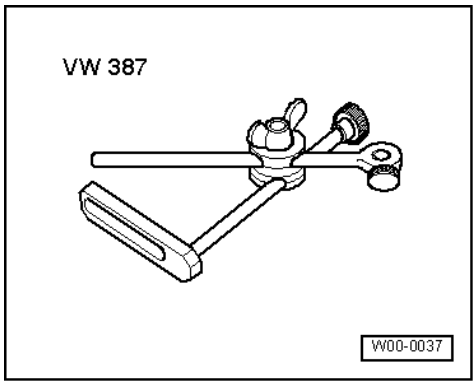

Special tools, workshop equipment, testers, measuring instruments and auxiliary items required

- -> VW 387 Universal dial gauge bracket
- Dial gauge

satelettronica

Test sequence

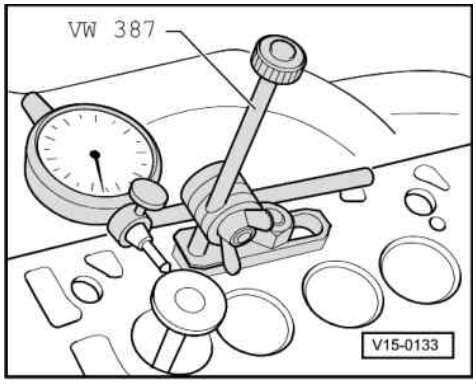

- -> Insert new valve into guide until end of valve stem is flush with end of guide. Due to the slight difference in stem dimensions, ensure that only an inlet valve is used in the inlet guide and an exhaust valve in the exhaust guide.
- Determine rock.
  Wear limit: 0.8 mm

Protected by copyright. Copying for private or commercial purposes, in part or in whole, is not permitted unless authorised by Volkswagen AG. Volkswagen AG does not guarantee or accept any liability with respect to the correctness of information in this document. Copyright by Volkswagen AG.
satelettronica

2.6 - Renewing valve stem seals

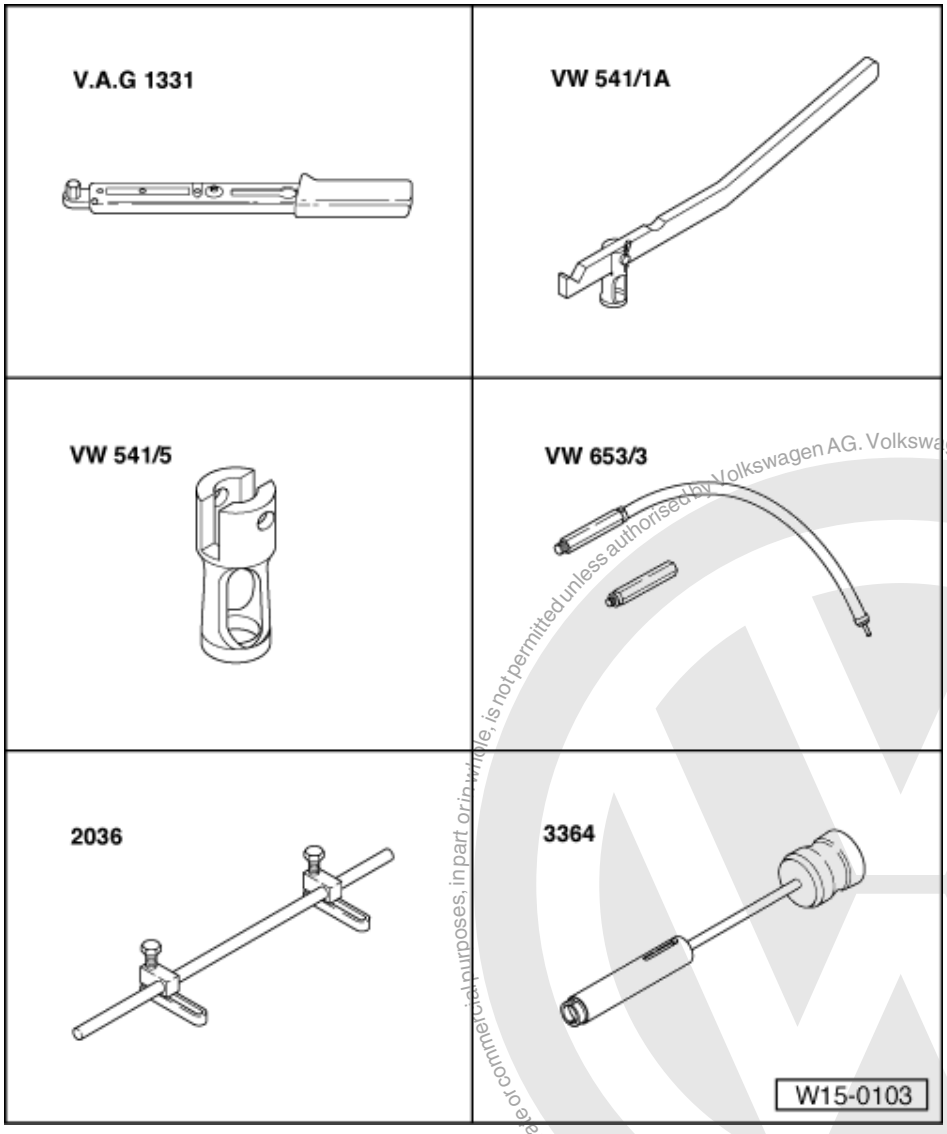

Special tools, workshop equipment, test and measuring appliances and auxiliary items required

- V.A.G 1331 Torque wrench (5...50 Nm)
- VW 541/1A Valve lever
- VW 541/5 Thrust piece
- VW 653/3 Pressure hose
- 2036 Assembly appliance
- 3364 Puller

Protected by copyright. Copying for private or commercial purposes, in part or in whole, is not permitted unless authorised by Volkswagen AG. Volkswagen AG does not guarantee or accept any liability with respect to the correctness of information in this document. Copyright by Volkswagen AG.
satelettronica

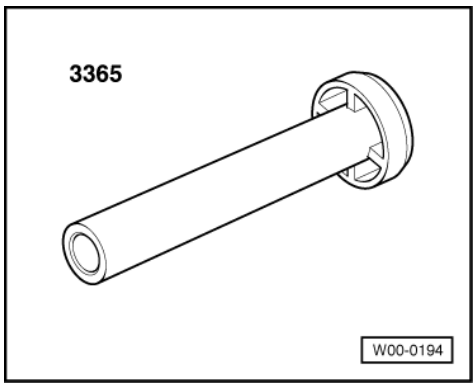

◆ -> 3365 Press tool

Removing

- First remove toothed belt
  => Page 57 .
- Then remove camshaft => Page 75 .
- Remove roller rocker finger together with support elements and place on a clean surface.
- Ensure the roller rocker fingers and the support elements are not interchanged.

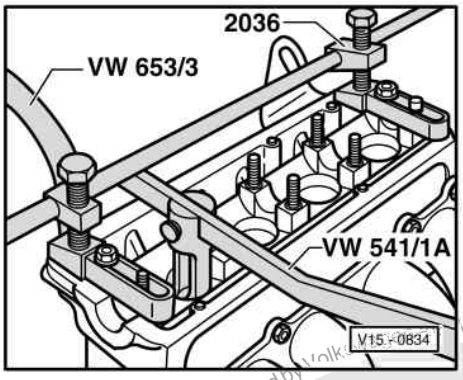

- Remove spark plugs.
- Set piston of appropriate cylinder to "bottom dead centre".
- -> Fit assembly tool 2063 to cylinder head using old bolts from cylinder head cover.

- Screw pressure hose VW 653/3 into the spark plug thread.
- Connect pressure hose to a compressed air system of at least
  6 bar.
- Remove valve springs with lever VW 541/1A and press piece VW 541/5.

Note:

Tight cotters can be loosened by tapping lightly on the lever.

- Pull off valve stem seals with 3364.

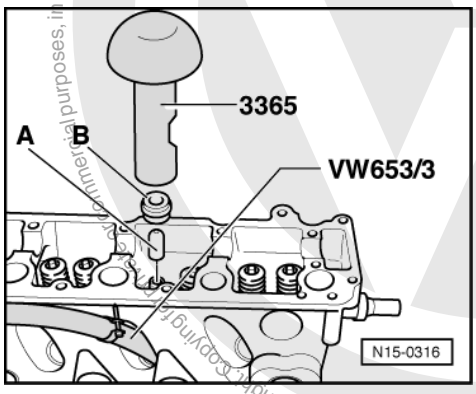

satelettronica
Protected by copyright. Copying for private or commercial purposes, in part or in whole, is not permitted unless authorised by Volkswagen AG. Volkswagen AG does not guarantee or accept any liability with respect to the correctness of information in this document. Copyright by Volkswagen AG.

Installing

- -> Place the plastic sleeve supplied on the appropriate valve stem. This will prevent the new valve stem seal being damaged.
- Insert new valve stem seal in fitting tool 3365.
- Oil valve stem seal sealing lip and press carefully onto the valve guide.

Protected by copyright. Copying for private or commercial purposes, in part or in whole, is not permitted unless authorised by Volkswagen AG. Volkswagen AG does not guarantee or accept any liability with respect to the correctness of information in this document. Copyright by Volkswagen AG.

satelettronica

17 - Lubrication

1 - Removing and installing parts of the lubrication system

1.1 - Removing and installing parts of the lubrication system

Note:
The oil level must not be above the max. mark - danger of damaging catalyst!
Marks => Page 88 , Fig. 1 .
Checking oil pressure => Page 93
Oil system capacity1):
with oil filter 3.2 ltr.
1) Up-to-date figures:
=> Exhaust emissions test binder
Engine oil specifications:
Use engine oil to VW standard 500 00, 501 01 or 502 00. Only in exceptional cases: Multi-grade oils corresponding to API-SF or SG.

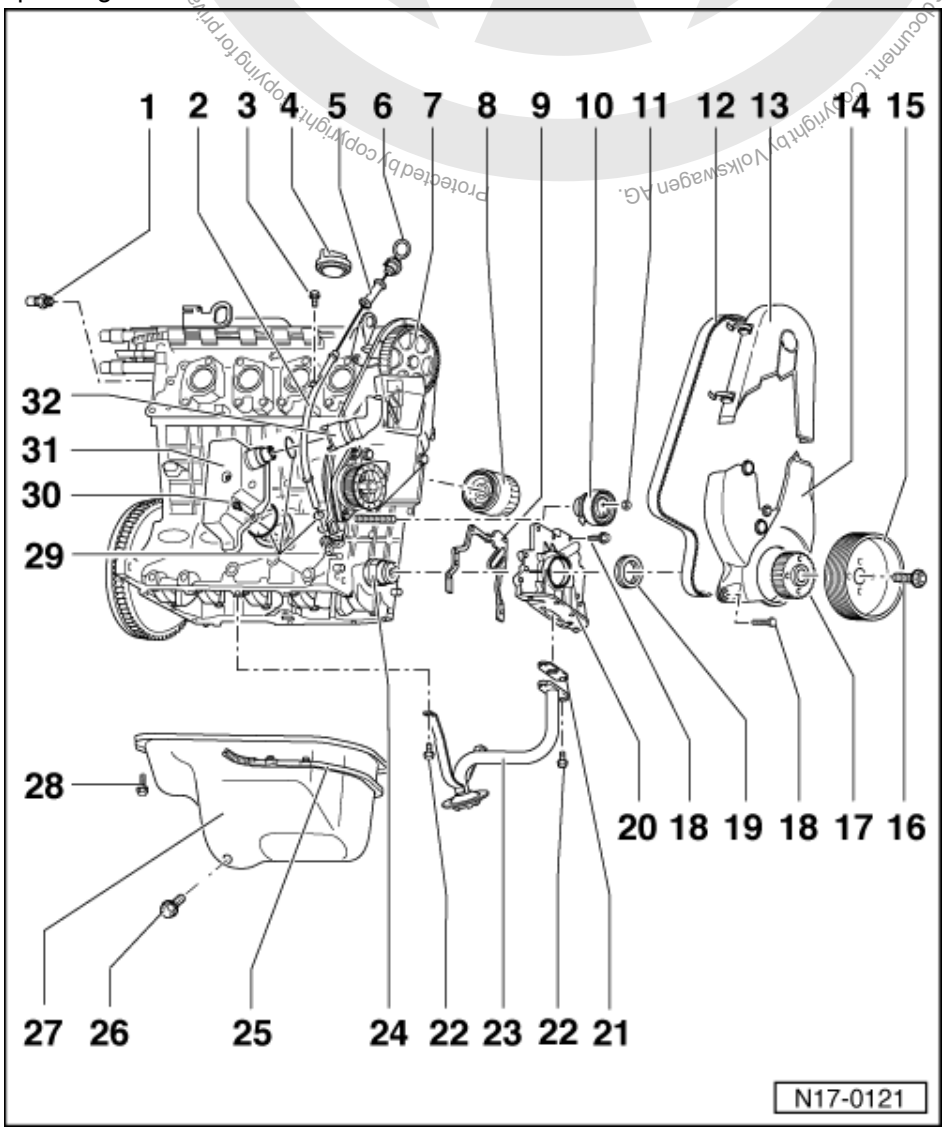

satelettronica

1 0.3...0.6 bar oil pressure switch (F1), 25 Nm

- Checking => Page 93

2 Guide tube

3 Self-tapping bolt

- max. rotational speed if using power tools: 350 rpm
- Fixture to intake manifold

4 Sealing cap

- Renew seal if damaged

5 Guide

- Pull off to extract oil

6 Dipstick

- The oil level must not be above the max. mark!
- Markings => Fig. 1

7 Camshaft sprocket

- Note position when installing the toothed belt => Page 57

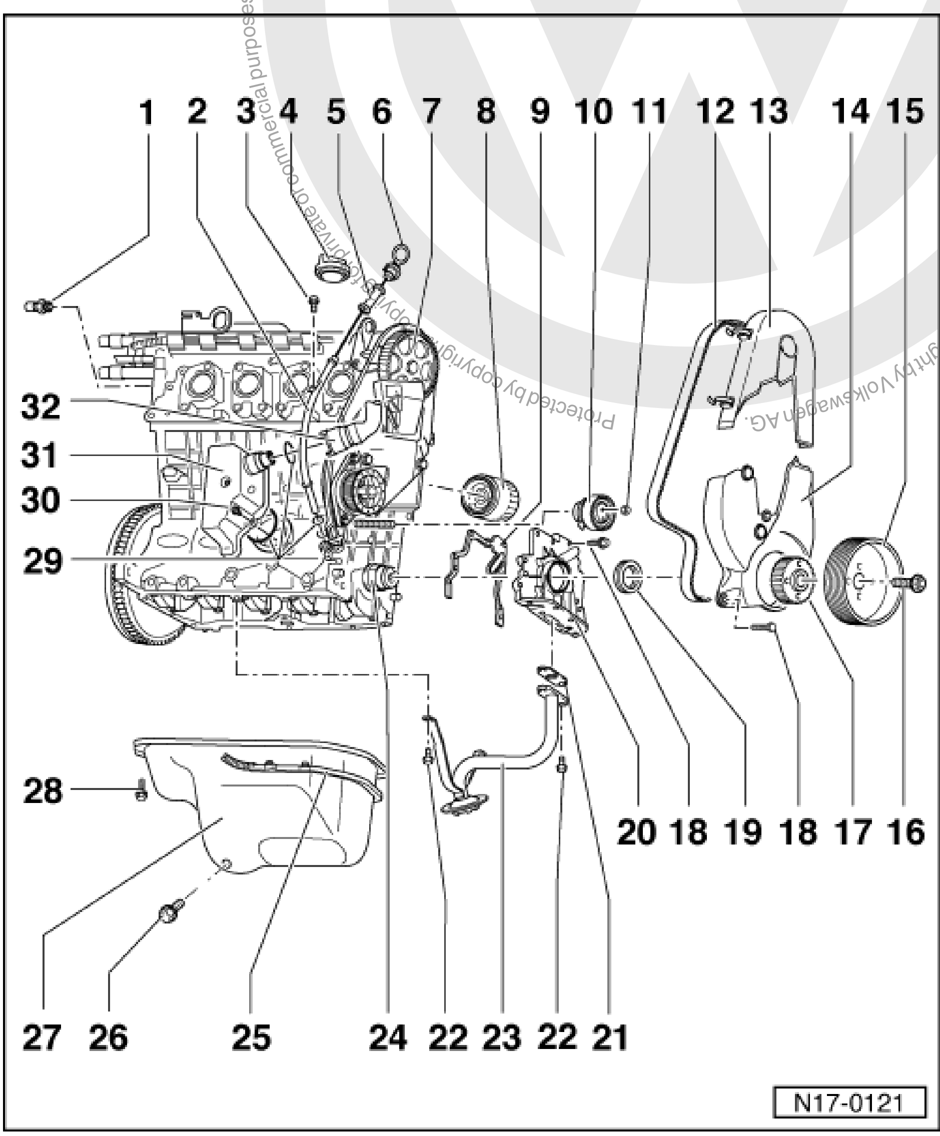

8 Oil filter

- Loosen with strap wrench
- Tighten by hand
- Observe installation instructions on oil filter

9 Gasket

- Renew

Protected by copyright. Copying for private or commercial purposes, in part or in whole, is not permitted unless authorised by Volkswagen AG. Volkswagen AG does not guarantee or accept any liability with respect to the correctness of information in this document. Copyright by Volkswagen AG.

satelettronica

Protected by copyright. Copyright by Volkswagen AG. Volkswagen AG does not guarantee or accept any liability with respect to the correctness of information in this document. Copyright by Volkswagen AG. Protected by copyright. Copyright for private or commercial purposes, in part or in whole is not permitted unless authorised by Volkswagen AG.

- Must be located on dowel sleeves

10 Tensioner
- Removing, installing and tensioning => Page 57

11 20 Nm

12 Toothed belt
- Mark D.O.R. before removing
- Check for wear
- Do not kink
- Removing, installing and tensioning => Page 57

13 Toothed belt guard - upper part

14 Toothed belt guard - lower part

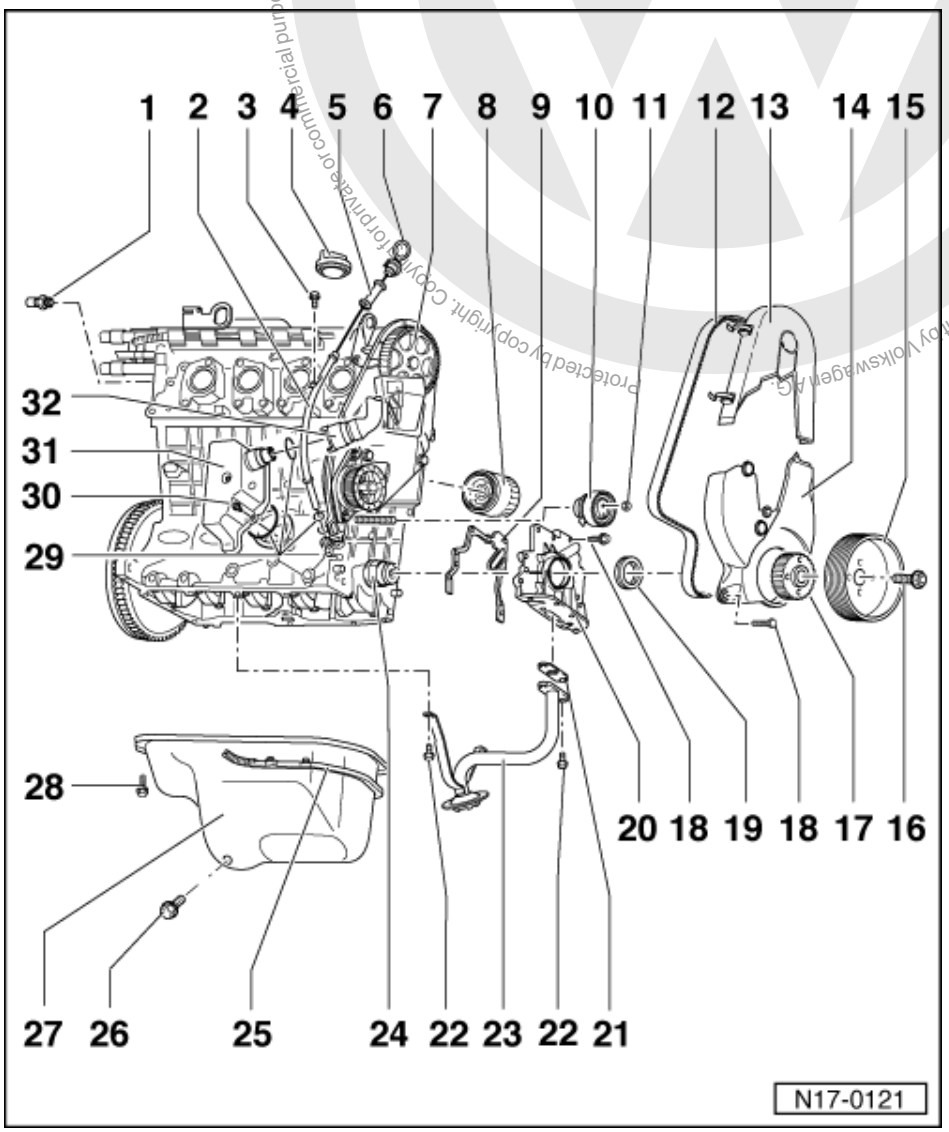

15 Belt pulley
- When installing note fixing arrangement

16 90 Nm + 1/4 turn (90 °) further
- Renew
- Oil threads
- Hold toothed belt sprocket with toothed belt sprocket holder 3099
- The turning further can be done in several stages
- The turning further angle can be measured with a commercial protractor e.g. Hazet 6690

17 Crankshaft toothed belt sprocket

satelettronica

- Note position when installing the toothed belt
  => Page 57

18 12 Nm
- Renew

19 Oil seal
- Renewing => Page 29

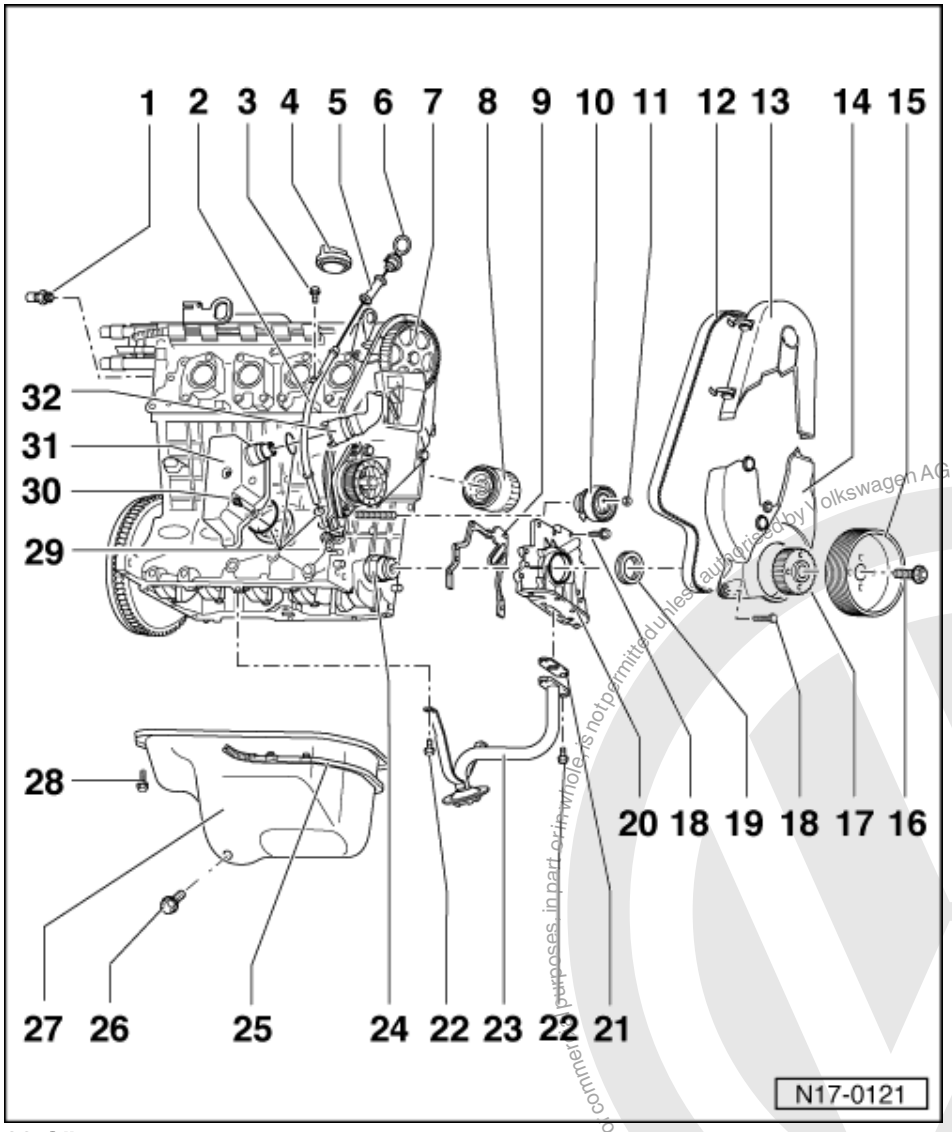

20 Oil pump
- Only renew complete
- When installing note drive cam on crankshaft
  => item 24
- Must be located on dowel sleeves
- Removing and installing
  => Page 90

21 Gasket
- Renew

22 10 Nm

23 Suction pipe
- Clean strainer if soiled

24 Drive cam
- Coat with oil before installing oil pump

25 Cable guide

Protected by copyright. Copying for private or commercial purposes, in part or in whole, is not permitted unless authorised by Volkswagen AG. Volkswagen AG does not guarantee or accept any liability with respect to the correctness of information in this document. Copyright by Volkswagen AG.
satelettronica

26 Oil drain plug, 30 Nm
- With attached seal
- Renew

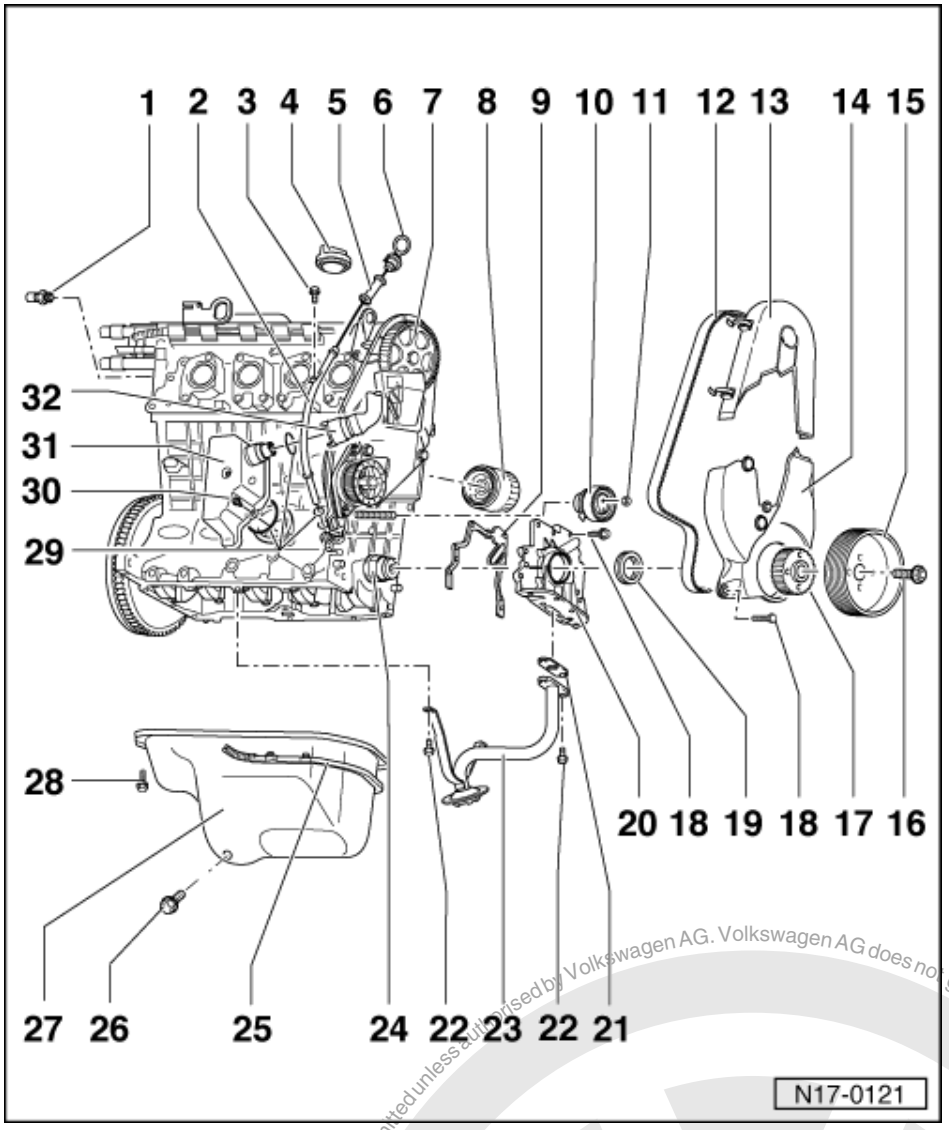

27 Sump
- Removing and installing engines with liquid gasket => Page 88
- Clean sealing surface before installing
- Install with silicone sealant D 176 404 A2 => Page 88

28 15 Nm
- Loosen and tighten the flywheel end bolts only with socket insert 3249

29 O-ring
- Renew

30 10 Nm

31 Oil separator

32 To air cleaner

satelettronica
Protected by copyright. Copying for private or commercial purposes, in part or in whole, is not permitted unless authorised by Volkswagen AG. Volkswagen AG does not guarantee or accept any liability with respect to the correctness of information in this document. Copyright by Volkswagen AG.

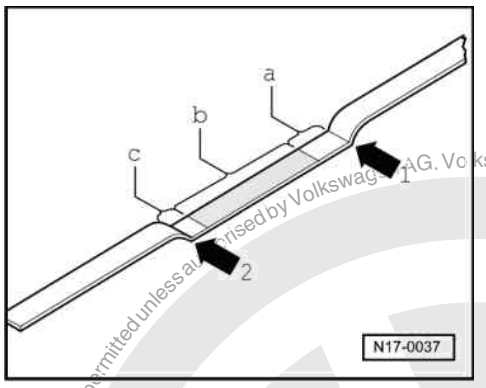

-> Fig. 1 Markings on oil dipstick

1 - max. mark
2 - min. mark
a - Area above hatched field up to max. mark: Do not replenish with engine oil!
b - Oil level within hatched field: can be replenished with engine oil
c - Area from min. mark up to hatched field: replenish with max. 0.5 ltr. of engine oil!

1.2 - Removing and installing oil sump

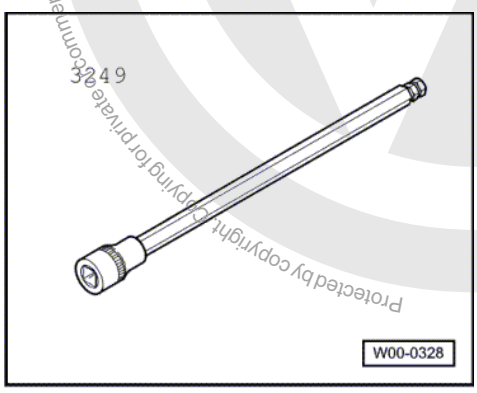

Special tools, workshop equipment, testers, measuring instruments and auxiliary items required

- -> 3249 Socket

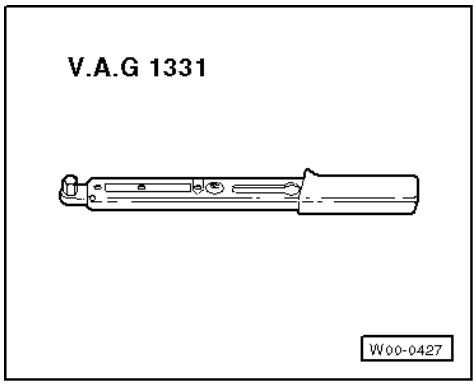

- -> V.A.G 1331 Torque wrench (5...50 Nm)
- Hand drill with plastic brush
- Flat scraper
- Silicone sealant D176404 A2

Protected by copyright. Copying for private or commercial purposes, in part or in whole, is not permitted unless authorised by Volkswagen AG. Volkswagen AG does not guarantee or accept any liability with respect to the correctness of information in this document. Copyright by Volkswagen AG.
satelettronica

Protected by copyright. Copying for private or commercial purposes, in part or in whole, is not permitted unless authorised by Volkswagen AG. Volkswagen AG does not guarantee or accept any liability with respect to the correctness of information in this document. Copyright by Volkswagen AG.

satelettronica

Work sequence

- Drain engine oil.
- Remove cable guide from the sump.
- Unbolt right-hand drive shaft at gearbox.

=> Running gear, axles, steering; Repair group 40; Servicing front suspension; Removing and installing drive shafts Servicing front suspension Removing and installing drive shafts

- Remove cover plate for flywheel.
- Unbolt sump sealed with liquid gasket.
- Remove sump, it may be necessary to release sump by tapping lightly with a rubber head hammer.

- Remove sealant residue on cylinder block with a flat scraper.

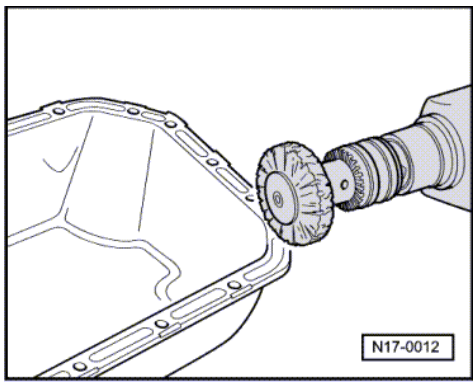

- -> Remove sealant residue on the sump with a rotating brush, e.g. a hand drill with a plastic brush (wear eye protection).
- Clean sealing surface, must be free of oil and grease.

Installing

Notes:

- Note the use by date of the sealant.
- Sump must be installed within 5 minutes of applying silicone sealing compound.
- Sump can be offered up easier and with greater security if, for guide purposes, M6 studs are inserted into the cylinder block flange at two positions.

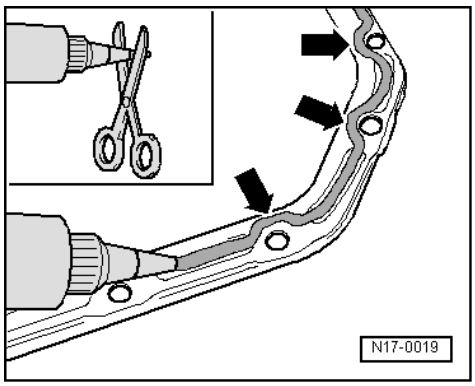

- -> Cut off tube nozzle at forward marking (nozzle approx. 3 mm ø).
- Apply silicone sealing compound, as shown, to clean sump sealing surface. Sealing compound bead must be.
  - 2...3 mm thick.
  - and run on inside of bolt holes -arrows-.

Note:

The sealing compound bead must not be thicker, otherwise excessive sealing compound will enter the sump and may block the oil suction pipe strainer.

- Install sump immediately and tighten all sump bolts lightly.
- Tighten sump bolts to
  15 Nm.

Note:

After installing sump the sealant must be allowed to dry for approx. 30 minutes before engine oil is replenished.

1.3 - Removing and installing oil pump

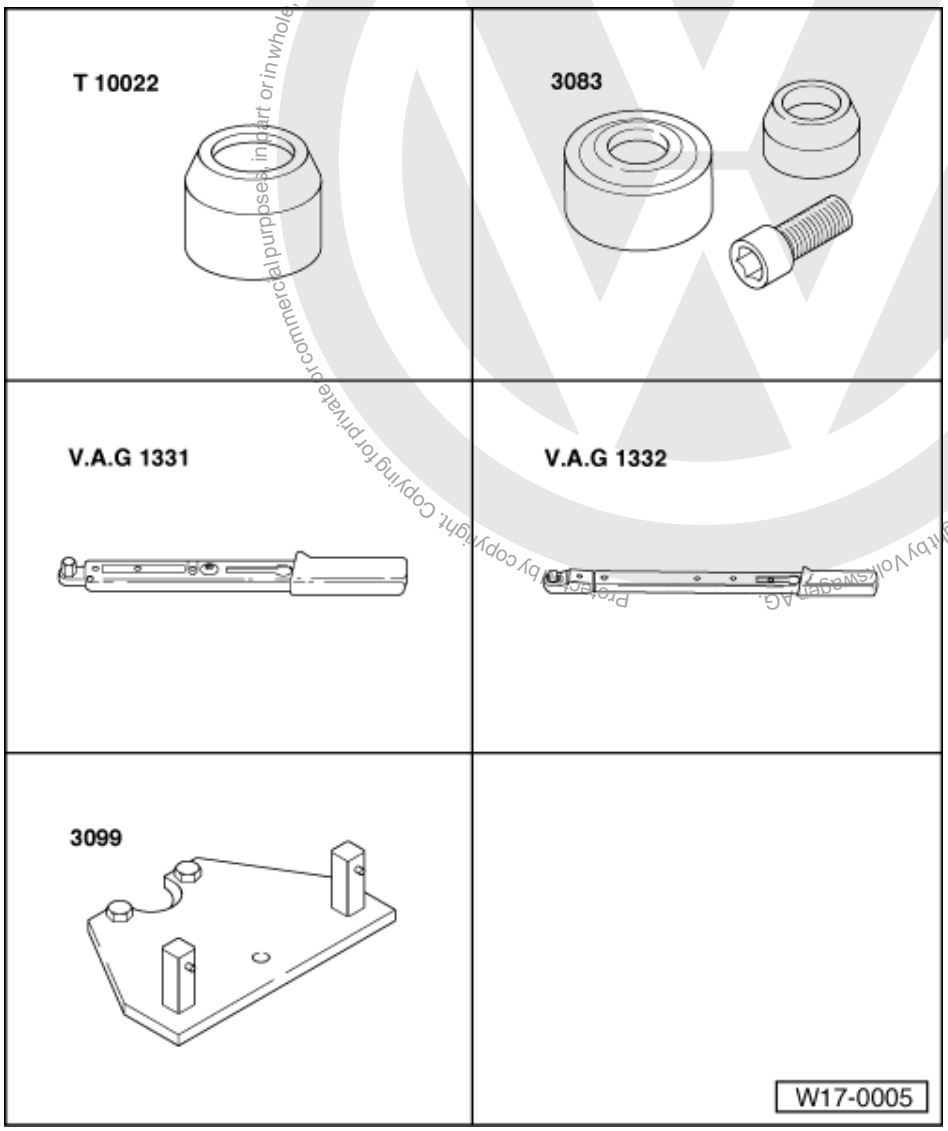

Special tools, workshop equipment, test and measuring appliances and auxiliary items required

- T10022 Sleeve
- 3083 Oil seal fitting tool
- V.A.G 1331 Torque wrench (5...50 Nm)
- V.A.G 1332 Torque wrench (40...200 Nm)

Protected by copyright. Copying for private or commercial purposes, in part or in whole, is not permitted unless authorised by Volkswagen AG. Volkswagen AG does not guarantee or accept any liability with respect to the correctness of information in this document. Copyright by Volkswagen AG.
satelettronica

- 3099 Counter-hold tool

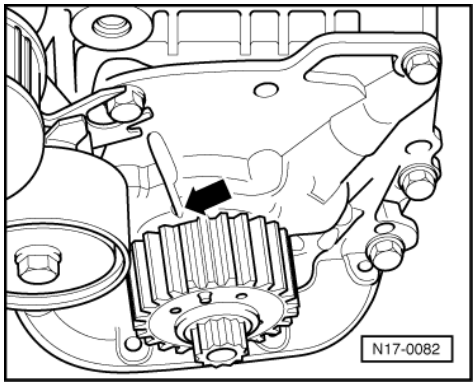

Removing

- Remove toothed belt => Page 57 , removing, installing and tensioning toothed belt.
- -> Position crankshaft at TDC No. 1 cylinder -arrow-:

  The chamfered tooth of toothed belt sprocket must align with the marking (2V) on the oil pump.

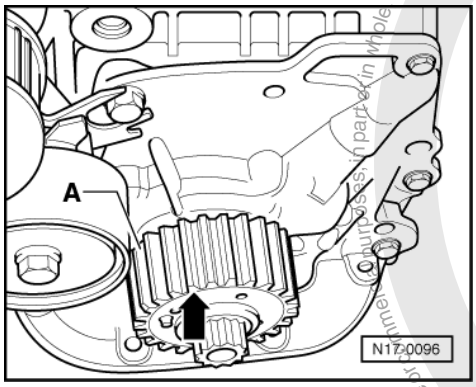

- -> Turn crankshaft/toothed belt sprocket three teeth anti-clockwise away from TDC:

  The third tooth -arrow- to the right of the ground down tooth -A- on the toothed belt sprocket must align with TDC mark (2V) on the oil pump housing.

Note:

This procedure moves the crankshaft to the correct installation position for the oil pump. One of the polygon cams on the crankshaft is uppermost.

- Loosen securing bolt from crankshaft toothed belt sprocket. To do this secure toothed belt sprocket using counter-hold tool 3099.
- Remove the toothed belt sprocket camshaft and toothed belt tensioning roller.
- Remove sump => Page 88 .
- Remove suction pipe => Page 86 , item 23 .
- Remove oil pump.
- Remove gasket.
- Remove sealant remnants on cylinder block with a flat scraper.

Copyright by Volkswagen AG. Volkswagen AG does not guarantee or accept any liability with respect to the correctness of information in this document. Copyright by Volkswagen AG. Protected by copyright. Copying for private or commercial purposes, in part or in whole is not permitted unless authorised by Volkswagen AG.
satelettronica

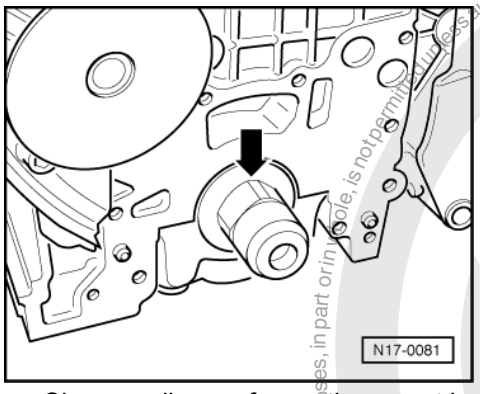

- Clean sealing surfaces, they must be oil and grease free.

Installing

Conditions

- -> One of the polygon cams -arrow- on the crankshaft is uppermost.

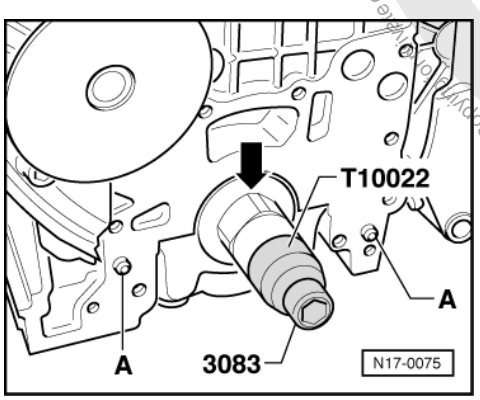

Work sequence

- -> Fit sleeve T10022 and hexagon socket head bolt from 3083 onto crankshaft and tighten hand tight.
- Fit new gasket onto guide pins -A-.

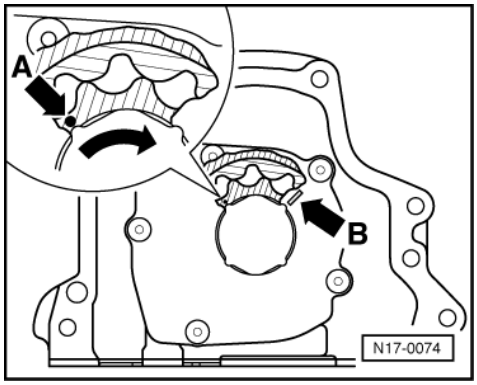

- -> Position one of the oil pump inner rotor markings arrow -A- on installation position mark arrow -B- on oil pump housing cover.
- Coat the four crankshaft polygon cams with oil.
- Guide oil pump carefully onto crankshaft polygon cams.

- Align inner rotor to crankshaft polygon cams by turning slightly if necessary.
- Then slide oil pump carefully onto guide pins.
- Secure oil pump with new bolts.
  Tightening torque: 12 Nm
- Remove sleeve T10022.
- Install suction pipe => Page 86 , item 23 .

Protected by copyright. Copyright by Volkswagen AG. Volkswagen AG does not guarantee or accept any liability with respect to the correctness of information in this document. Copyright by Volkswagen AG. Reproduction or publication, in whole or in part, for commercial purposes, is not permitted unless authorised by Volkswagen AG.
satelettronica

- Install oil sump => Page 88 .
- Install toothed belt sprocket and tensioning roller, Installing and tensioning toothed belt => Page 57 , Removing, installing and tensioning toothed belt.

1.4 - Checking oil pressure and oil pressure switch

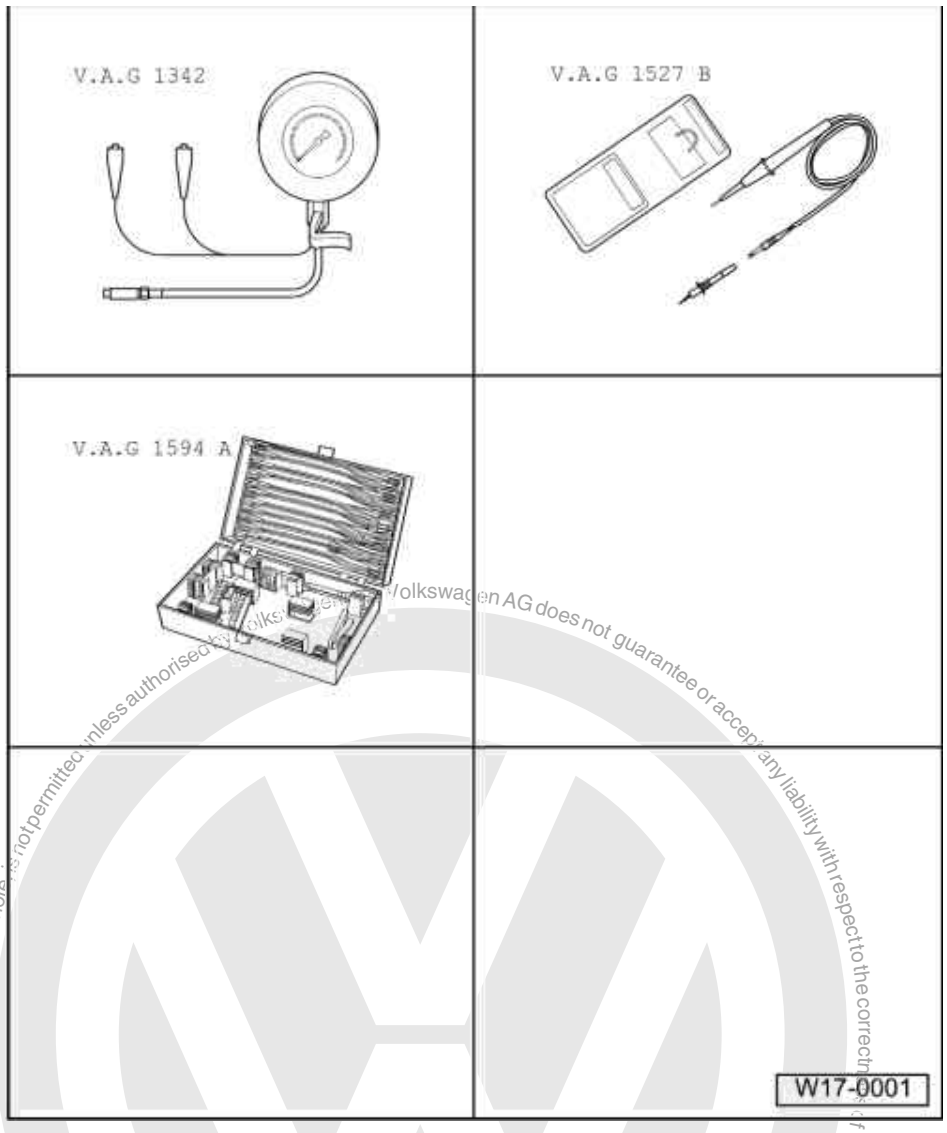

Special tools, workshop equipment, test and measuring appliances and auxiliary items required

- V.A.G 1342 Oil pressure tester
- V.A.G 1527 B Diode test lamp
- V.A.G 1594 A Adapter set

Function of the dynamic oil pressure warning indicator

When not under pressure, the oil pressure switch is open and will close when the operating pressure is attained.

The oil pressure warning will be activated
approx. 10 seconds
after switching the ignition on.

Switch-in delay of oil pressure warning

satelettronica

approx. 3 seconds.

Switch-off delay of oil pressure warning
approx. 5 seconds.

Checking warning lamp

After switching on the ignition and engine not started the oil pressure warning lamp in dash panel insert must light for
approx. 3 seconds
and then go out. The test will be terminated if the engine is running.

Criteria for warning

The optical oil pressure warning switches on (the oil pressure warning lamp flashes) and the buzzer sounding three times for the acoustical warning under one of the following conditions.

- "Ignition on", engine stationary, oil pressure switch closed
- Engine speed above 1500 rpm, oil pressure switch open

Notes:

If the oil pressure switch is closed, the warning lamp will remain switched on if the engine speed is above 5000 rpm. The warning lamp will be switched off again if the engine speed is below 5000 rpm.

If the oil pressure switch is open for 0.3 ... 3.0 seconds when the engine speed is above 1500 rpm, it will be stored in the combi-processor in the dash panel insert. If this condition occurs three times when the engine is running, the oil pressure warning will be activated and will not be cancelled even below 1500 rpm.

The oil pressure warning will be cancelled when the oil pressure switch is closed for longer than 5 seconds at an engine speed above 1500 rpm or when the ignition is switched off.

Test conditions

- Engine oil level OK, checking => Page 88
- Oil pressure warning lamp (K3) must light up for approx. 3 seconds when ignition is switched on
- Engine oil temperature at least 80 °C (radiator fan must have run once)

Test sequence

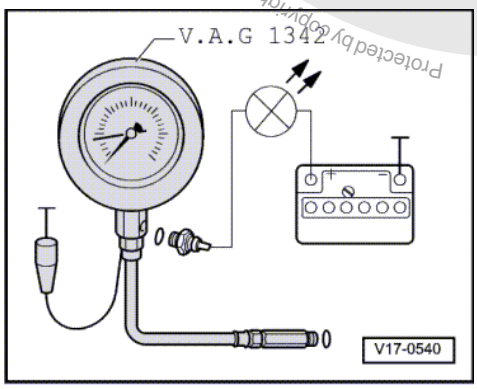

- -> Remove oil pressure switch (F1) and screw into tester.
- Screw tester into the cylinder head in place of the oil pressure switch.
- Connect brown wire of tester to earth (-).
- Connect diode test lamp V.A.G 1527 B using aux. cables from V.A.G 1594 A to battery positive (+) and oil pressure switch.
- If the LED lights up, renew oil pressure switch (F1) .

If the LED does not light up:

- Start engine and increase speed slowly.
  At
  0.3...0.6 bar

Protected by copyright. Copying for private or commercial purposes, in part or in whole, is not permitted unless authorised by Volkswagen AG. Volkswagen AG does not guarantee or accept any liability with respect to the correctness of information in this document. Copyright by Volkswagen AG.
satelettronica

the LED must light up; otherwise renew oil pressure switch.
- Increase engine speed further.
  At 2000 rpm and an oil temperature of 80 °C the oil pressure should be at least 2.0 bar.

At higher engine speed the oil pressure must not exceed 7.0 bar.

Protected by copyright. Copying for private or commercial purposes, in part or in whole, is not permitted unless authorised by Volkswagen AG. Volkswagen AG does not guarantee or accept any liability with respect to the correctness of information in this document. Copyright by Volkswagen AG.

satelettronica

19 - Cooling system

1 - Removing and installing parts of cooling system

1.1 - Removing and installing parts of cooling system

Notes:

- When the engine is warm the cooling system is under pressure. If necessary release pressure before commencing repair work.
- Hoses are secured with spring-type clips. In cases of repair only use spring-type clips.
- V.A.G 1921 or VAS 5024 pliers are recommended when installing spring-type clips.

Perform cooling system leakage test with cooling system tester V.A.G 1274 and adapters V.A.G 1274/3 and V.A.G 1274/4.

Parts of cooling system body side =>Page 97 .

Parts of cooling system engine side => 100 .

Coolant hose connection diagram =>Page 104 .

Draining and filling with coolant=> Page 105 .

Coolant mixture ratios => Page 105 , draining and filling with coolant

Protected by copyright. Copyright for private or commercial purposes, in part or in whole, is not permitted unless authorised by Volkswagen AG. Volkswagen AG does not guarantee or accept any liability with respect to the correctness of information in this document. Copyright by Volkswagen AG.
satelettronica

1.2 - Parts of cooling system body side

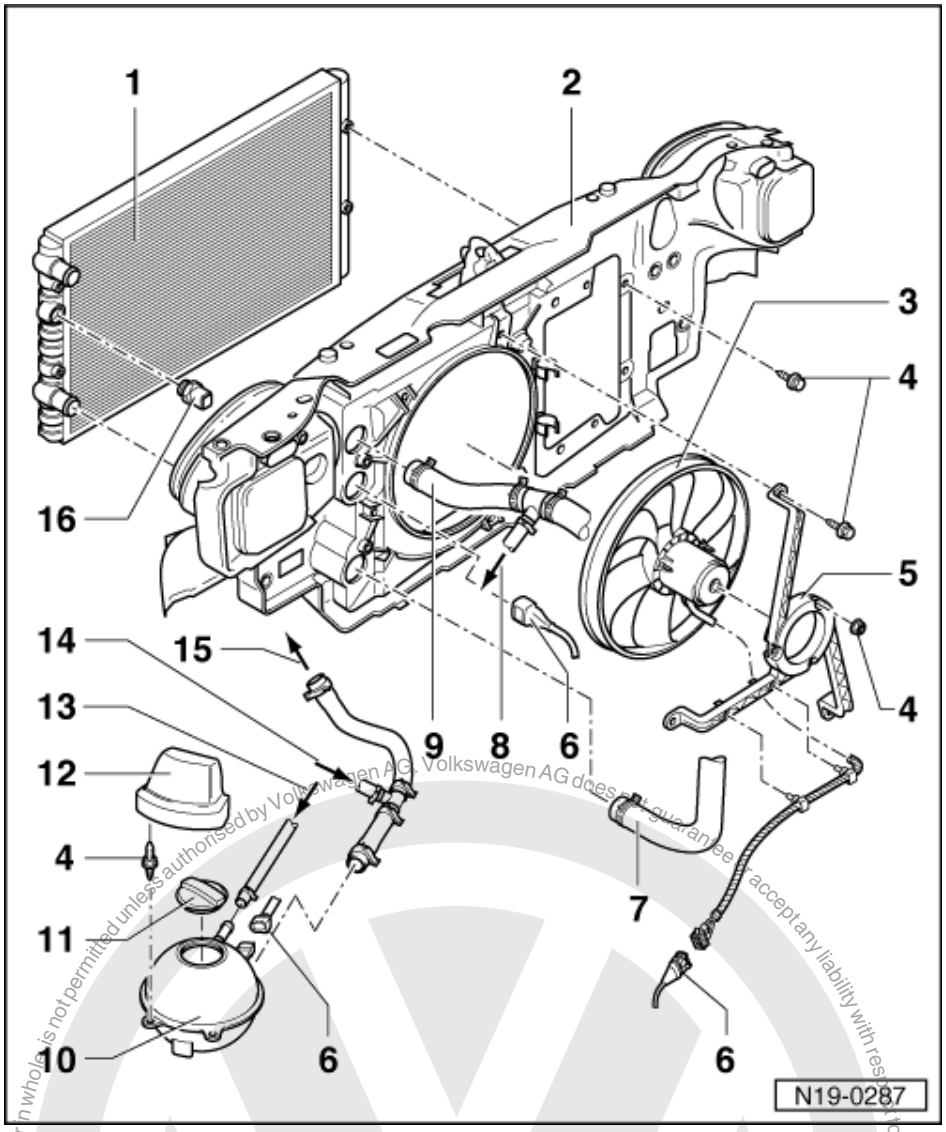

1 Radiator
- Removing and installing =>Page 107
- After replacing renew entire coolant

2 Lock carrier

3 Radiator fan

4 10 Nm

5 Bracket
- For electric fan

6 Connector

7 Lower coolant hose
- Coolant hose connection diagram =>Page 104

Protected by copyright. Copyright by Volkswagen AG.
Volkswagen AG does not guarantee or accept any liability with respect to the correctness of information in this document. Copyright by Volkswagen AG.
Volkswagen AG, Volkswagen AG, Wolfsburg. It is not permitted to use or give to others, in part or in whole, for commercial purposes, in part or in whole, is not permitted unless authorised by Volkswagen AG.
satelettronica

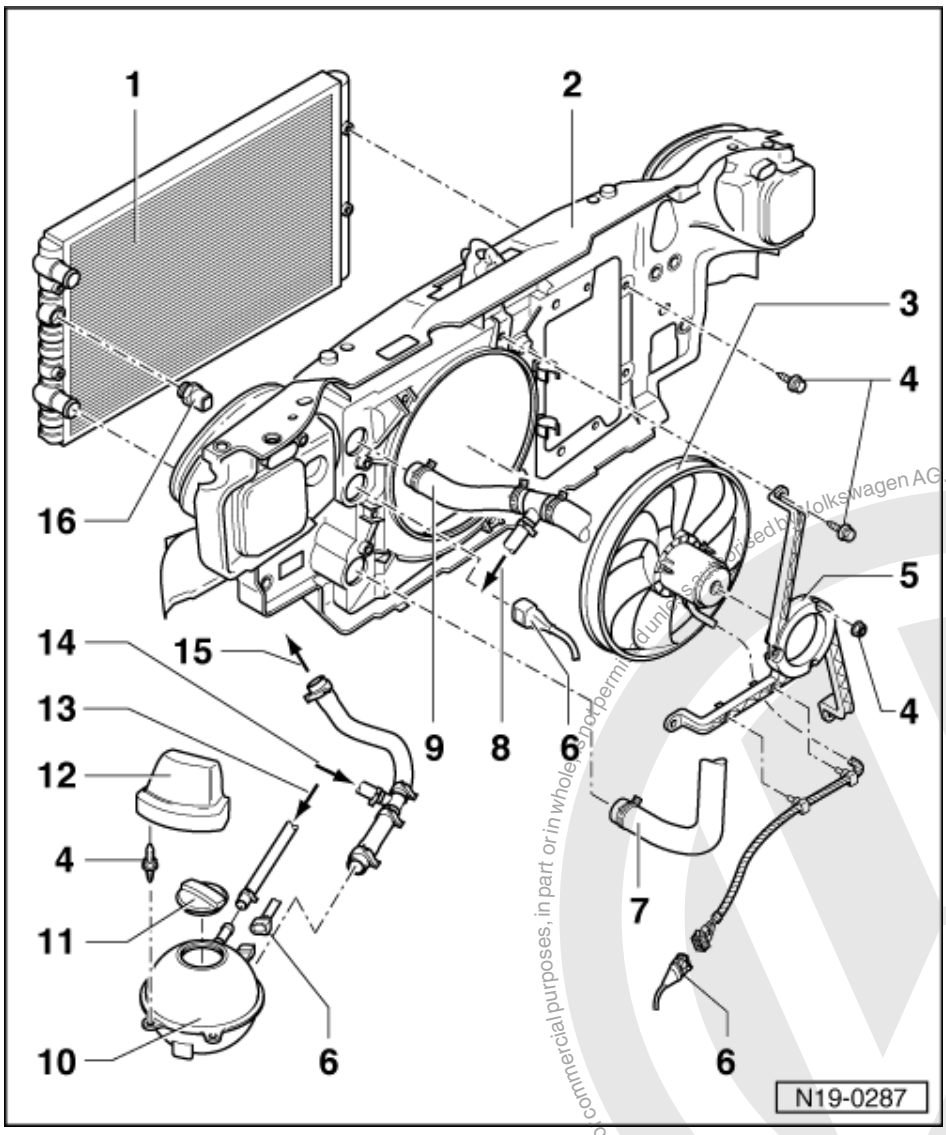

8 To ATF cooler
- Only on vehicles with automatic gearbox
- Coolant hose connection diagram =>Page 104

9 Upper coolant hose
- Coolant hose connection diagram =>Page 104

10 Expansion tank
- Carry out leak test of cooling system with cooling system tester V.A.G 1274 and adapter V.A.G1274/3

11 Cap
- Check with V.A.G 1274 and 1274/4
- Test pressure 1.4...1.6 bar

12 Cover

13 From thermostat housing
- Coolant hose connection diagram =>Page 104

Published by copyright. Copyright for private or commercial purposes, in part or in whole is not permitted unless authorised by Volkswagen AG. Volkswagen AG does not guarantee or accept any liability with respect to the correctness of information in this document. Copyright by Volkswagen AG.
satelettronica

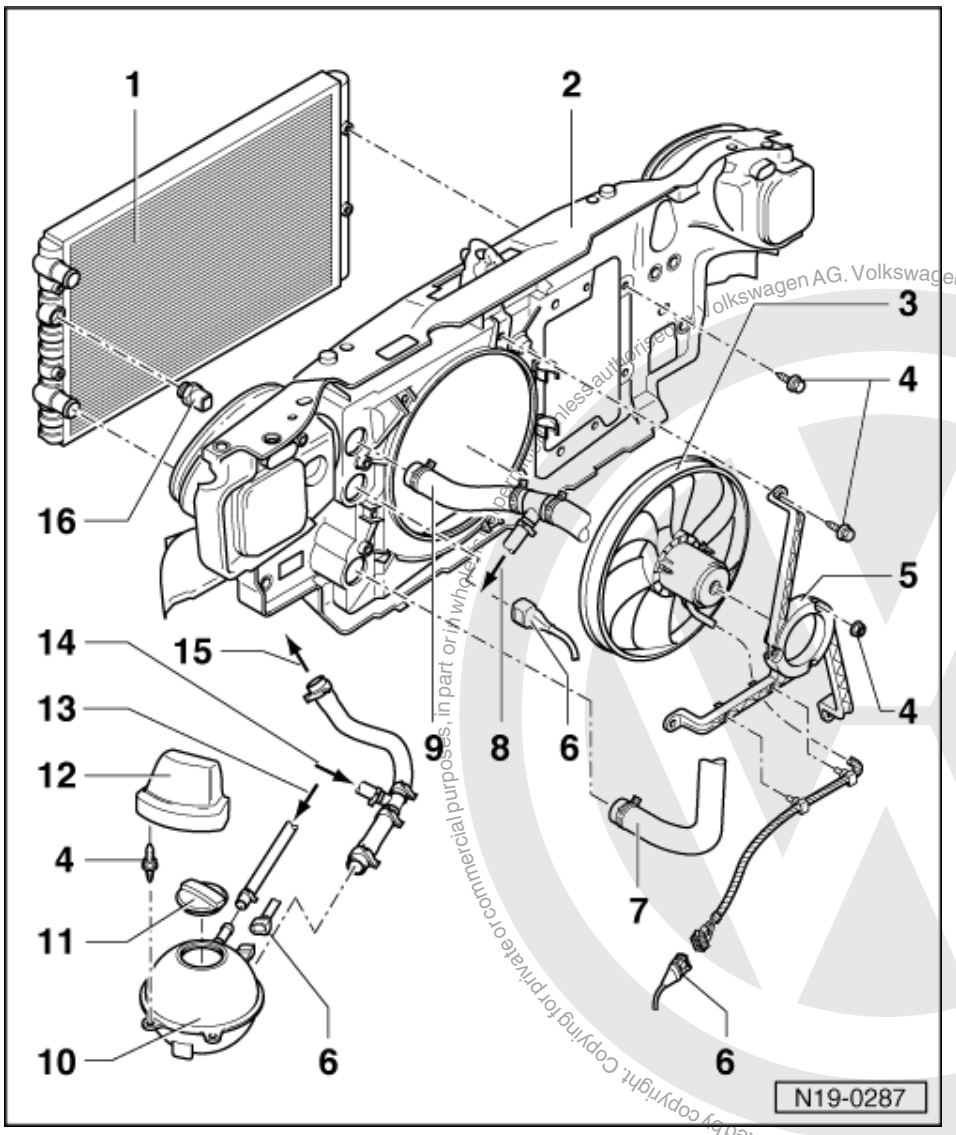

14 From ATF cooler

- Only on vehicles with automatic gearbox
- Coolant hose connection diagram =>Page 104

15 To thermostat housing

- Coolant hose connection diagram =>Page 104

16 Thermo-switch (F18), 35 Nm

- For electric fan
- Switching temperatures:
  Stage 1
  on: 92...97 °C
  off: 84...91 °C
  Stage 2
  on: 99...105 °C
  off: 91...98 °C

Protected by copyright. Copying for private or commercial purposes, in part or in whole, is not permitted unless authorised by Volkswagen AG. Volkswagen AG does not guarantee or accept any liability with respect to the correctness of information in this document. Copyright by Volkswagen AG.
satelettronica

1.3 - Parts of cooling system engine side

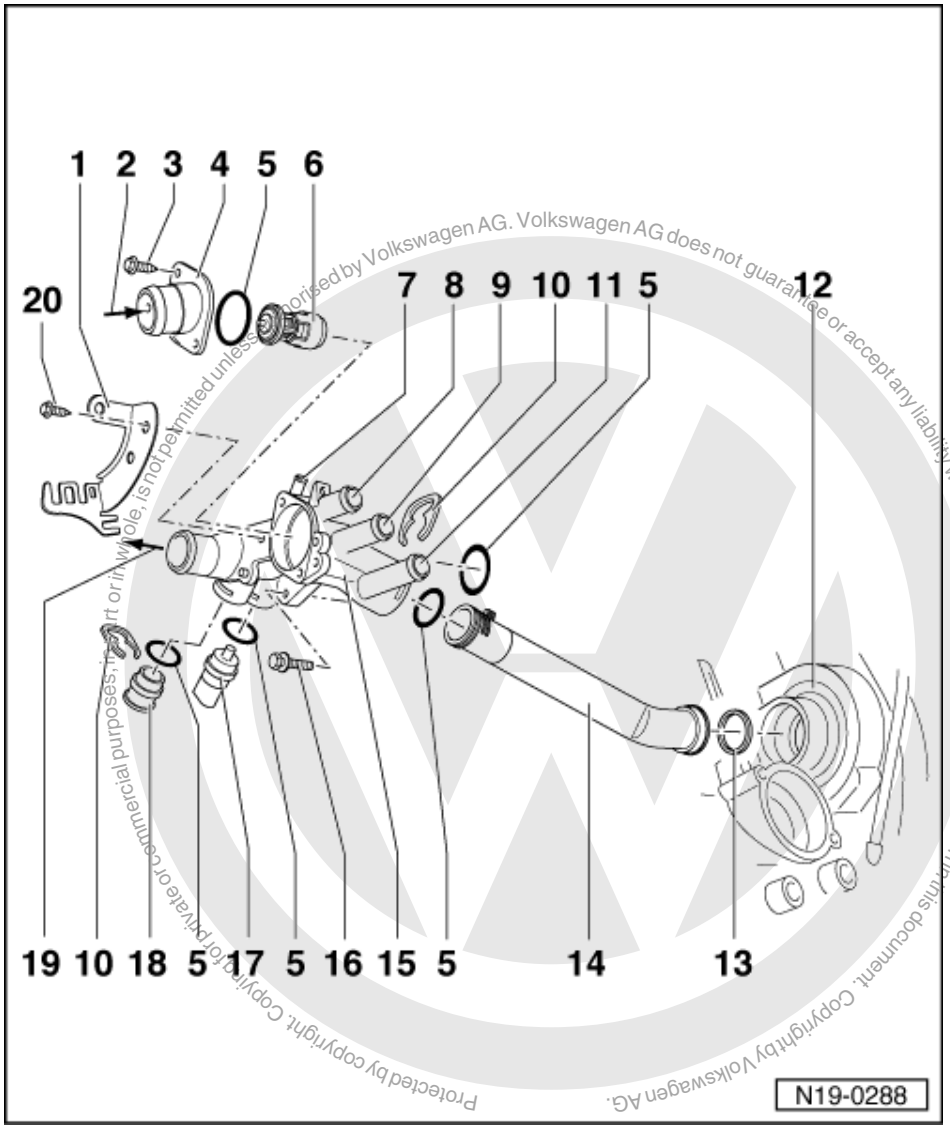

Protected by copyright. Copying for private or commercial purposes, in part or in whole, is not permitted unless authorised by Volkswagen AG. Volkswagen AG does not guarantee or accept any liability with respect to the correctness of information in this document. Copyright by Volkswagen AG.

satelettronica

1 Retainer
- For connectors

2 From bottom of radiator
- Coolant hose connection diagram =>Page 104

3 Self-tapping bolt, 10 Nm
- max. rotational speed if using power tools: 350 rpm

4 Connection

5 O-ring
- Renew

6 Coolant thermostat
- Checking operation: heat-up thermostat in water the thermo element pin must move out
- Temperature check: Opening starts (approx. 84 °C) and ends (approx. 98 °C) cannot be checked.

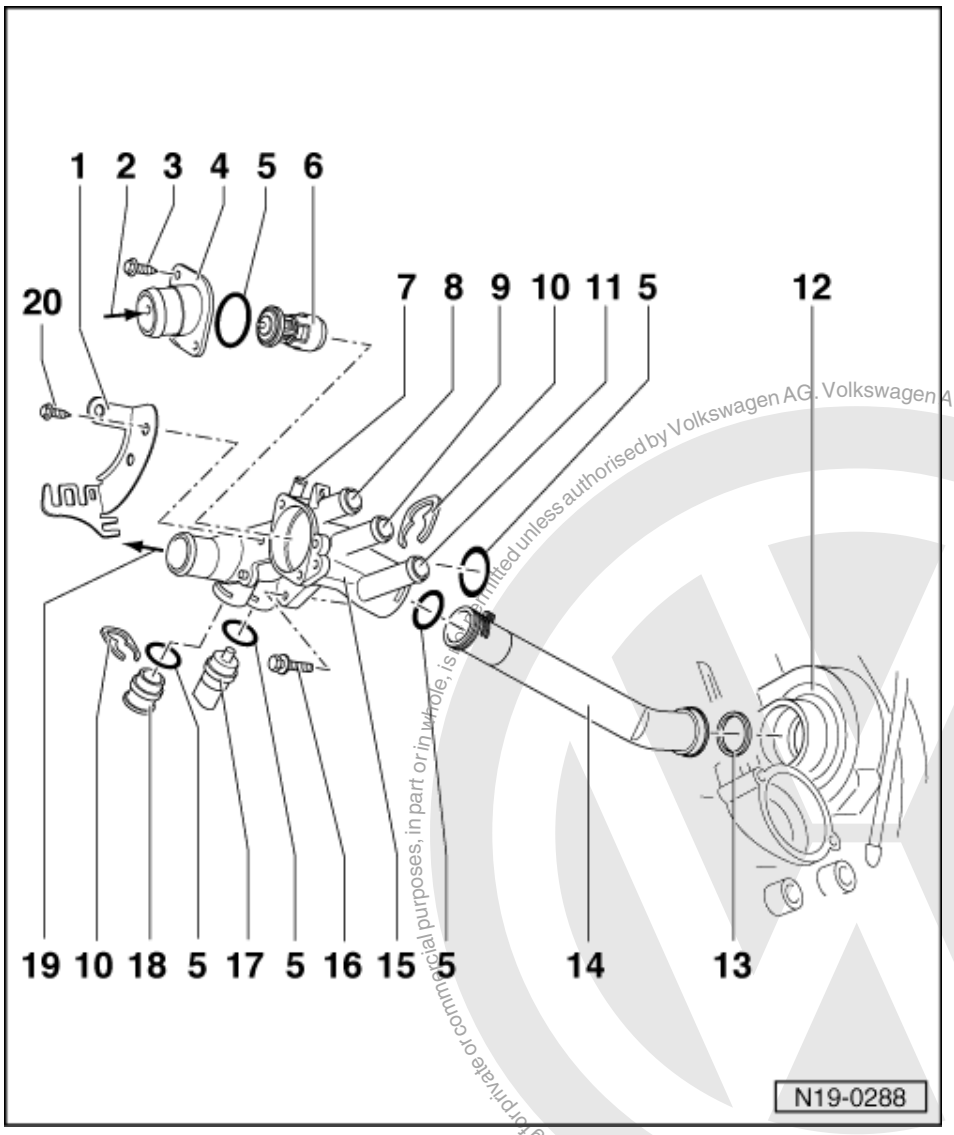

7 To expansion tank
- Coolant hose connection diagram =>Page 104

8 To heat exchanger

9 From expansion tank
- Coolant hose connection diagram =>Page 104

10 Retaining clip

11 From heat exchanger

12 Coolant pump housing on cylinder block

13 Seal
- Renew

14 Coolant pipe

15 Thermostat housing

16 10 Nm

Protected by copyright. Copying for private or commercial purposes, in part or in whole, is not permitted unless authorised by Volkswagen AG. Volkswagen AG does not guarantee or accept any liability with respect to the correctness of information in this document. Copyright by Volkswagen AG.
satelettronica

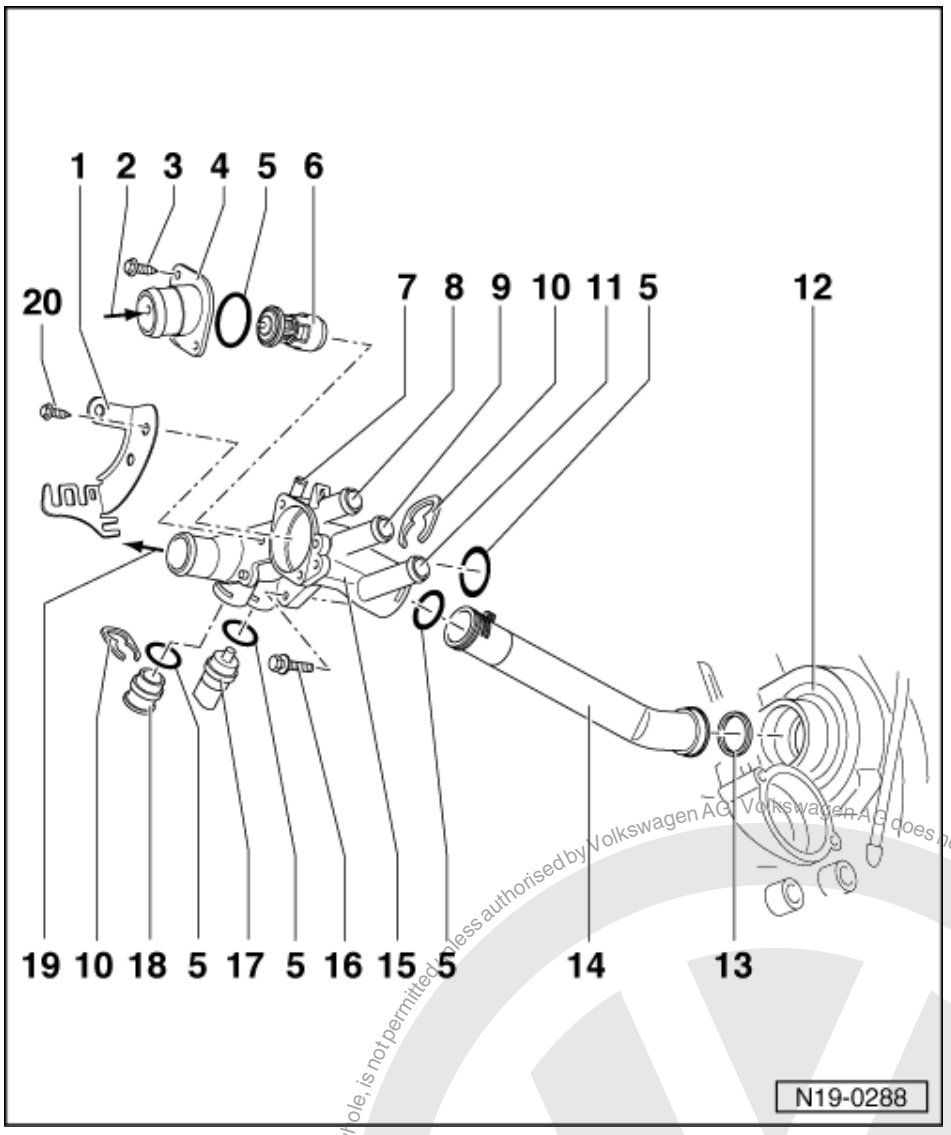

17 Coolant temperature sender (G62)
- With coolant temperature gauge sender (G2)

18 Sealing plug

19 To top of radiator
- Coolant hose connection diagram =>Page 104

20 Self-tapping bolt
- max. rotational speed if using power tools: 350 rpm

Protected by copyright. Copying for private or commercial purposes, in part or in whole, is not permitted unless authorised by Volkswagen AG. Volkswagen AG does not guarantee or accept any liability with respect to the correctness of information in this document. Copyright by Volkswagen AG.
satelettronica

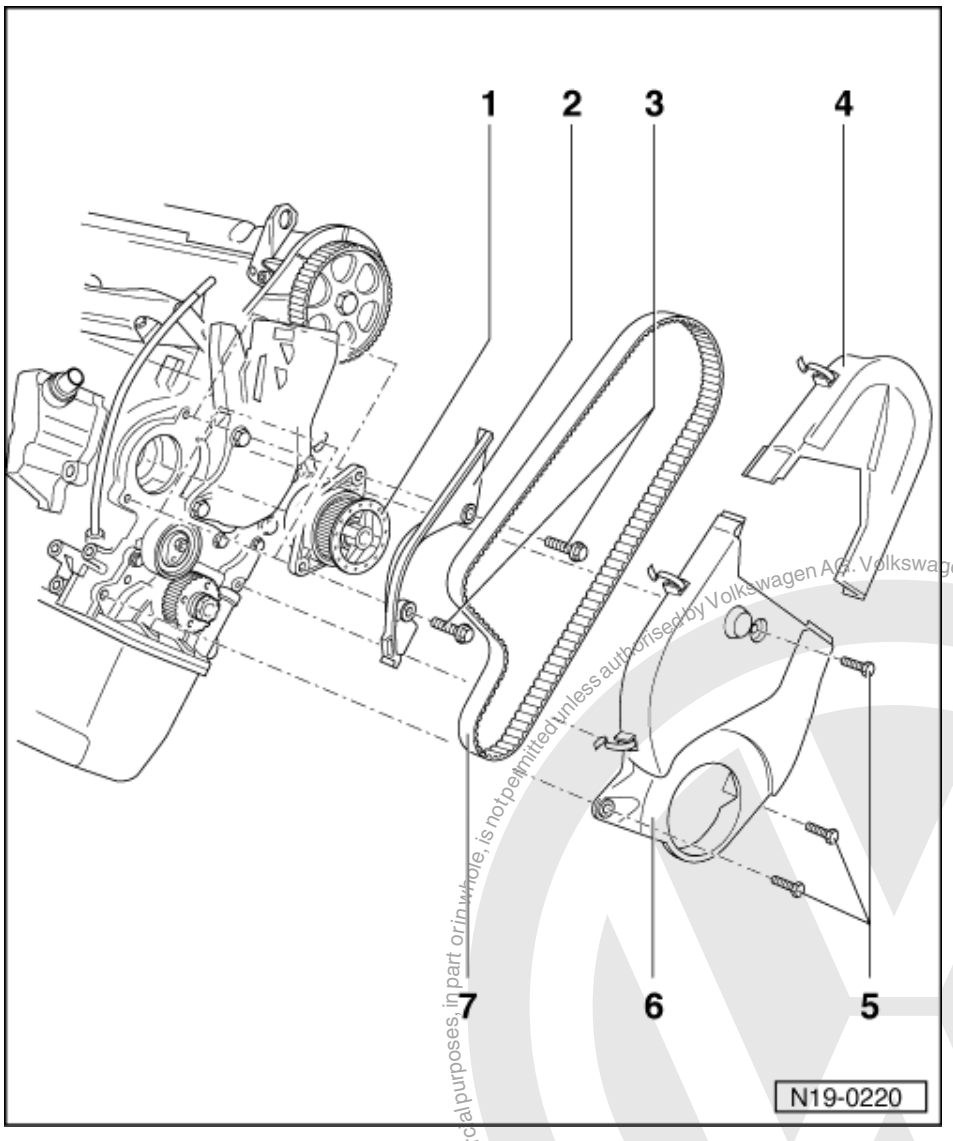

Coolant pump side

1 Coolant pump
- With integrated seal
- Seal must not be separated from coolant pump
- Replace damaged or leaking coolant pump together with seal
- Check for ease of movement

2 Toothed belt guard - coolant pump

3 20 Nm

4 Toothed belt guard - upper part

5 12 Nm
- Renew

6 Toothed belt guard - lower part

7 Toothed belt
- Check for wear
- Do not kink
- Removing, installing and tensioning
  => Page 57

Protected by copyright. Copyright by Volkswagen AG. Volkswagen AG does not guarantee or accept any liability with respect to the correctness of information in this document. Copyright by Volkswagen AG. Copying for private or commercial purposes, in part or in whole, is not permitted unless authorised by Volkswagen AG.
satelettronica

1.4 - Coolant hose connection diagram

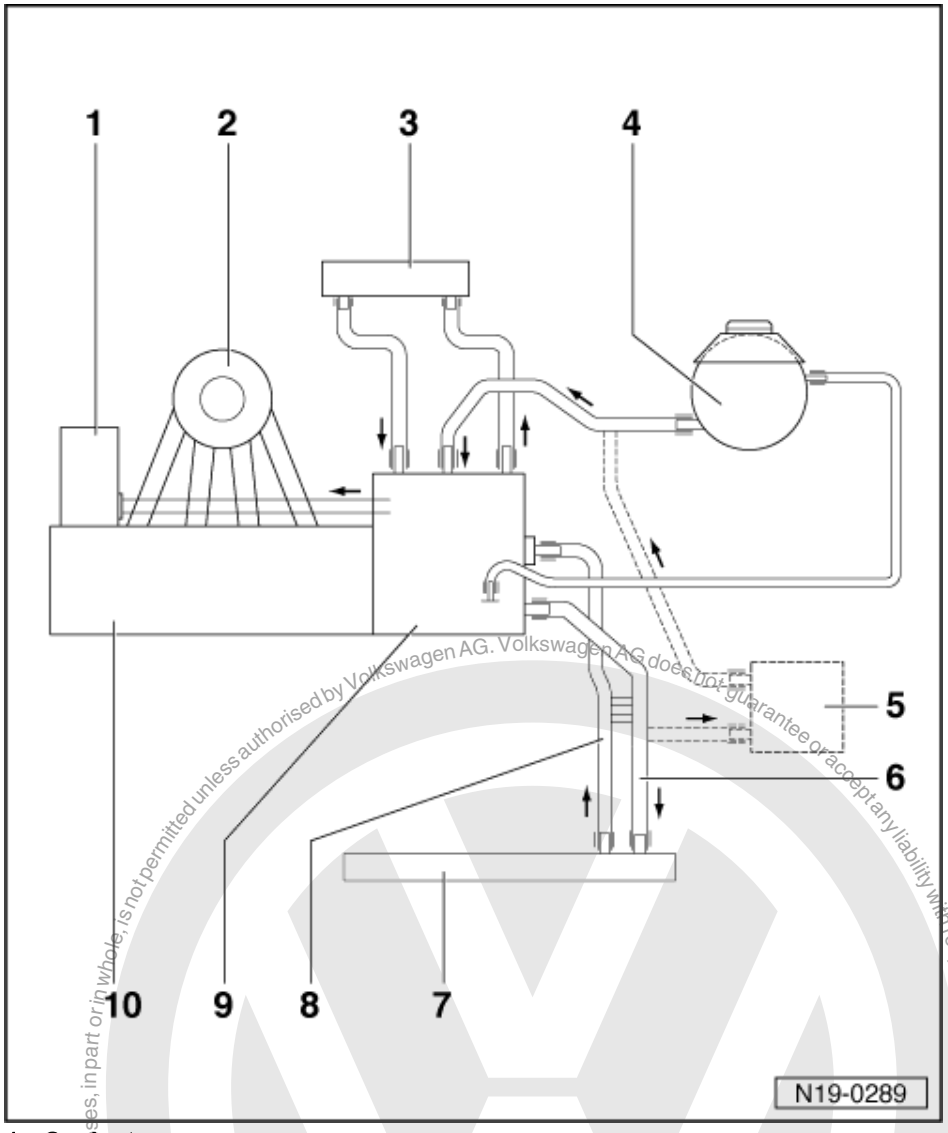

1 Coolant pump
2 Intake manifold
3 Heating system heat exchanger
4 Expansion tank
5 ATF cooler
- Only on vehicles with automatic gearbox

6 Upper coolant hose
7 Radiator
8 Lower coolant hose
9 Thermostat housing
10 Cylinder block

Protected by copyright. Copying for private or commercial purposes, in part or in whole, is not permitted unless authorised by Volkswagen AG. Volkswagen AG does not guarantee or accept any liability with respect to the correctness of information in this document. Copyright by Volkswagen AG.

satelettronica

1.5 - Draining and filling cooling system

Special tools, workshop equipment, testers, measuring instruments and auxiliary items required

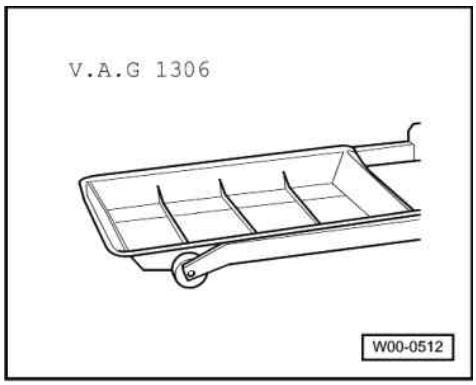

- -> V.A.G 1306 Drip tray

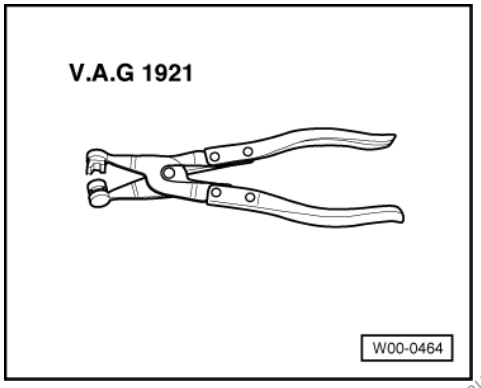

- -> V.A.G 1921 Pliers for spring-type clips or VAS 5024 assembly tool for spring-type clips
- Anti-freeze tester

Draining

- Remove cap from coolant expansion tank.
- Drain coolant from bottom radiator hose.

Note:

Observe disposal regulations!

Filling

Notes:

- Only use coolant additive G 12 in accordance with TL VW 774 F.
  Distinguishing feature: coloured violet
- G 12 violet (in accordance with TL VW 774 F) can be mixed with the previous coolant additive G 12 red!
- G 12 and coolant additives marked "In accordance with TL VW 774 F" prevent frost and corrosion damage, scaling and also raise boiling point of coolant. For this reason the system must be filled all year round with frost and corrosion protection additives.

- Because of its high boiling point, the coolant improves engine reliability under heavy loads, particularly in countries with tropical climates.
- Protection against frost must be assured to about -25 °C (in arctic climatic countries to about -35 °C).
- The coolant concentration must not be reduced by adding water even in warmer seasons and in warmer countries. The anti-freeze ratio must be at least 40 %.
- If for climatic reasons a greater frost protection is required, the amount of G 12 can be increased, but only up to 60 % (frost protection to about -40 °C), as otherwise frost protection is reduced again and cooling effectiveness is also reduced.

satelettronica

- If radiator, heat exchanger, cylinder head or cylinder head gasket is replaced, do not reuse old coolant.

Recommended mixture ratios:

Frost pro- tection to	Anti-freeze amount	G 121)	Water1)
-25 °C -35 °C	40 % 50 %	2.25 l 2.8 l	3.35 l 2.8 l

1) The quantity of coolant can vary depending upon the vehicle equipment.

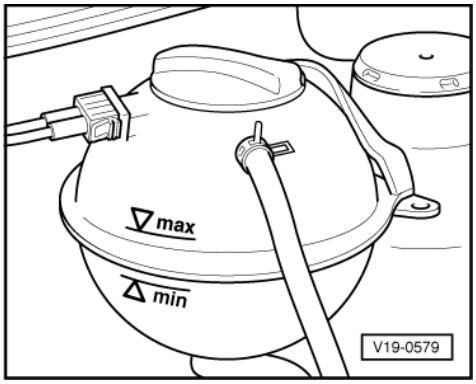

- -> Fill with coolant up to max. mark on expansion tank.
- Fit expansion tank cap.
- Start engine and maintain an engine speed of about 2000 rpm for approx. 3 minutes.
- Run engine until radiator fan cuts-in.
- Check coolant level and replenish as necessary. When the engine is at normal operating temperature, the coolant level must be on the max. mark, when the engine is cold, between the min. and max. marks.

Protected by copyright. Copying for private or commercial purposes, in part or in whole, is not permitted unless authorised by Volkswagen AG. Volkswagen AG does not guarantee or accept any liability with respect to the correctness of information in this document. Copyright by Volkswagen AG.

satelettronica

1.6 - Removing and installing radiator

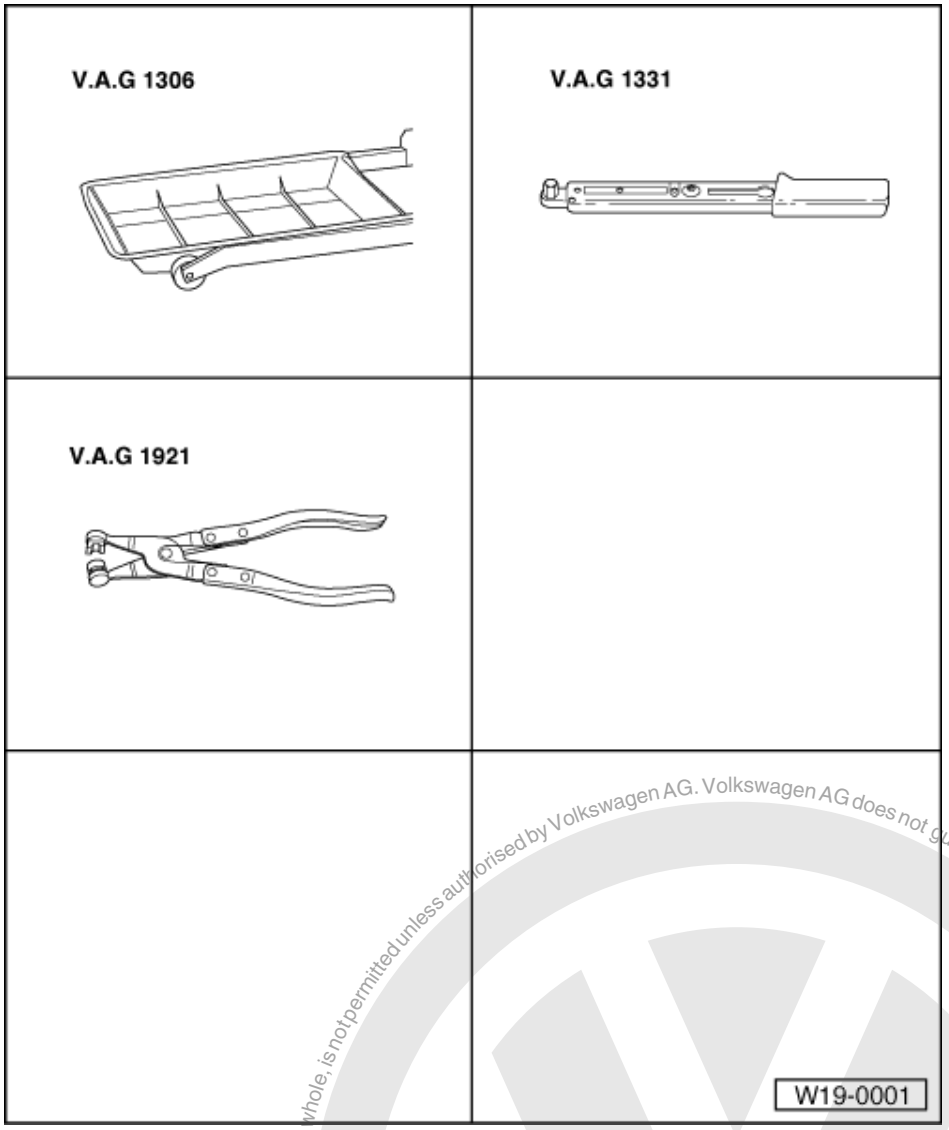

Special tools, workshop equipment, test and measuring appliances and auxiliary items required

- V.A.G 1306 Drip tray
- V.A.G 1331 Torque wrench (5...50 Nm)
- V.A.G 1921 Pliers for spring-type clips or VAS 5024 assembly tool for spring-type clips
- Anti-freeze tester

Removing

- Remove front bumper cover and bumper carrier:

=> General body repairs, exterior; Repair group 63; Front bumper; Assembly overview Front bumper Assembly overview

- Drain coolant => Page 105 .
- Pull coolant hoses off radiator.
- Pull connectors off thermo-switch.
- Remove radiator securing bolts and take out radiator downwards.

Vehicles with air conditioning system:

satelettronica
Protected by copyright. Copying for private or commercial purposes, in part or in whole, is not permitted unless authorised by Volkswagen AG. Volkswagen AG does not guarantee or accept any liability with respect to the correctness of information in this document. Copyright by Volkswagen AG.

- Observe additional information and removal work => Page 108 .

Installing

Installation is carried out in the reverse order, when doing this note the following:

- Filling with coolant => Page 105
- Electrical connections and routing:

=> Current flow diagrams, Electrical fault finding and Fitting locations

Additional information and removal work on vehicles with air conditioner

Warning! The air conditioning system refrigerant circuit must not be opened.

Note:

To prevent damage to condenser and also to the refrigerant lines/hoses, ensure that the pipes and hoses are not stretched, kinked or bent.

- Remove retaining clamp(s) from refrigerant pipes.
- Unbolt condenser from radiator and secure to lock carrier.
- Pull radiator out carefully, downwards.

Protected by copyright. Copying for private or commercial purposes, in part or in whole, is not permitted unless authorised by Volkswagen AG. Volkswagen AG does not guarantee or accept any liability with respect to the correctness of information in this document. Copyright by Volkswagen AG.

satelettronica

20 - Fuel supply system

1 - Removing and installing parts of fuel supply system

1.1 - Removing and installing parts of fuel supply system

Notes:

- Always replace clamp-type clips with spring or screw-type clips.
- Fuel hoses in engine compartment must only be secured with spring-type clips. The use of clamp or screw-type clips is not permissible.
- V.A.G 1921 or VAS 5024 pliers are recommended when installing spring-type clips.

Observe safety precautions=> Page 115 .

Observe rules for cleanliness => Page 116 .

Observe crash fuel shut-off => Page 116 .

Removing and installing fuel tank with attachments and fuel filter => Page 110 .

Servicing parts of electronic accelerator control (EPC) => Page 127 .

Servicing parts of the activated charcoal filter system => Page 134 .

Protected by copyright. Copying for private or commercial purposes, in part or in whole, is not permitted unless authorised by Volkswagen AG. Volkswagen AG does not guarantee or accept any liability with respect to the correctness of information in this document. Copyright by Volkswagen AG.
satelettronica

1.2 - Removing and installing fuel tank with its attachments and fuel filter

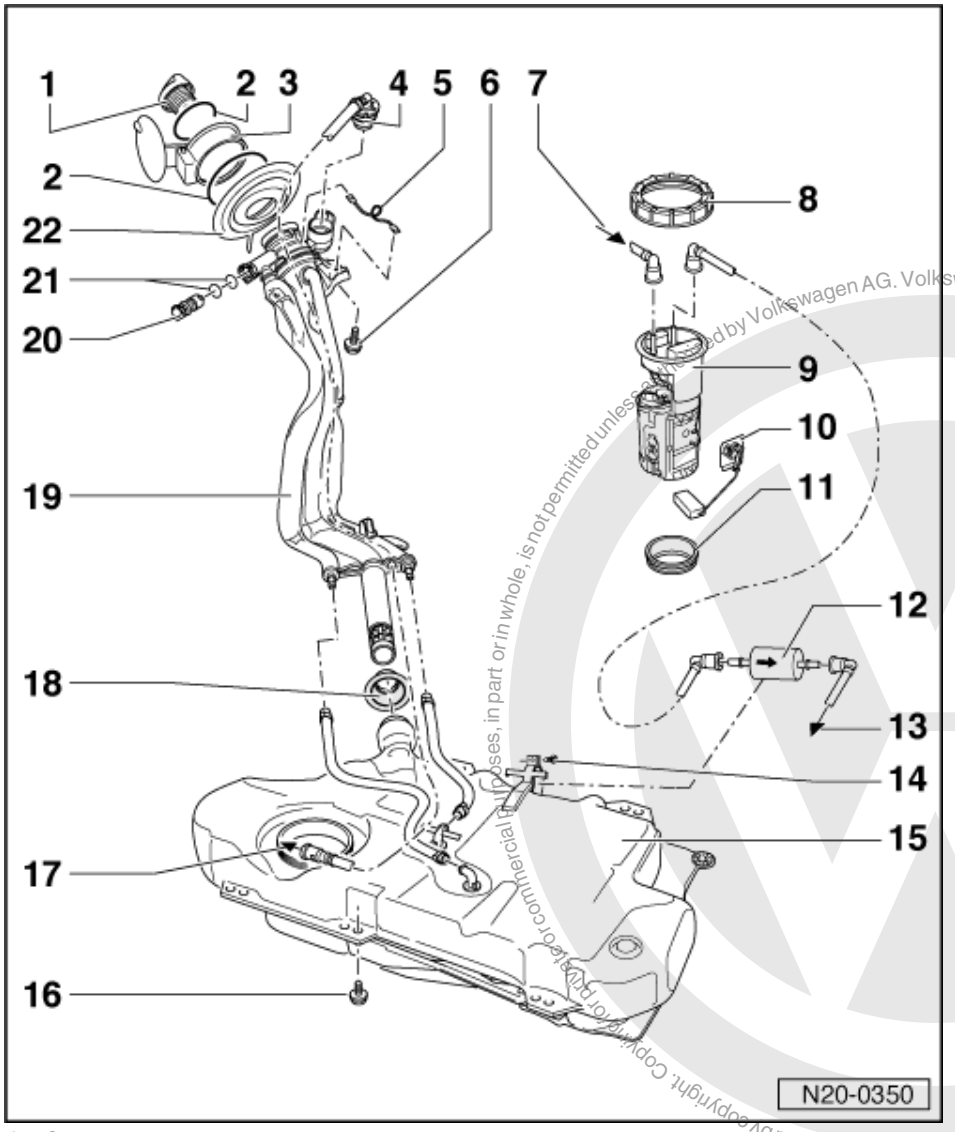

1 Cap
2 Retaining ring
3 Tank flap unit
- Removing and installing

=> General body repairs; Repair group 55; Removing and installing fuel flap unit Removing and installing fuel flap unit

4 Gravity/overflow valve
- To remove, release locking lug and unclip valve upwards out of filler neck
- Check valve for through-flow
  valve vertical: open,
  valve tilted 90 °: closed

satelettronica

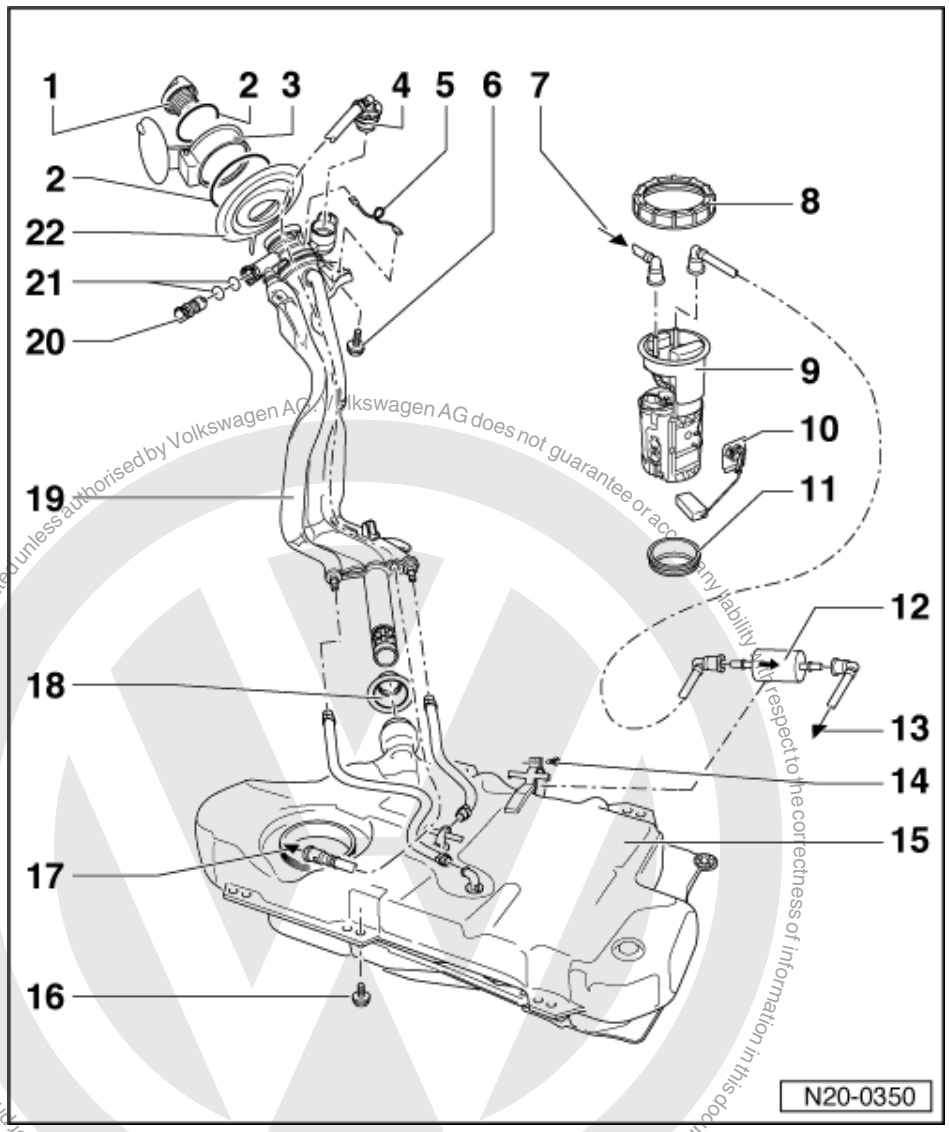

5 Earth connection
6 10 Nm
7 Return pipe
- Blue
- From fuel manifold

=> Repair group 24; Servicing injection system; Dismantling and assembling fuel rail with injectors Servicing injection system Dismantling and assembling fuel rail with injectors

8 Union nut
- Remove and install with 3217

9 Fuel delivery unit
- Removing and installing
  => Page 116
- Checking fuel pump
  => Page 119
- Note fitting position on fuel tank => Fig. 1

Reproduced by copyright. Copyright by Volkswagen AG. Any private or commercial purposes, in part or in whole, is not permitted unless authorised by Volkswagen AG. Volkswagen AG does not guarantee or accept any liability with respect to the correctness of information in this document.
satelettronica

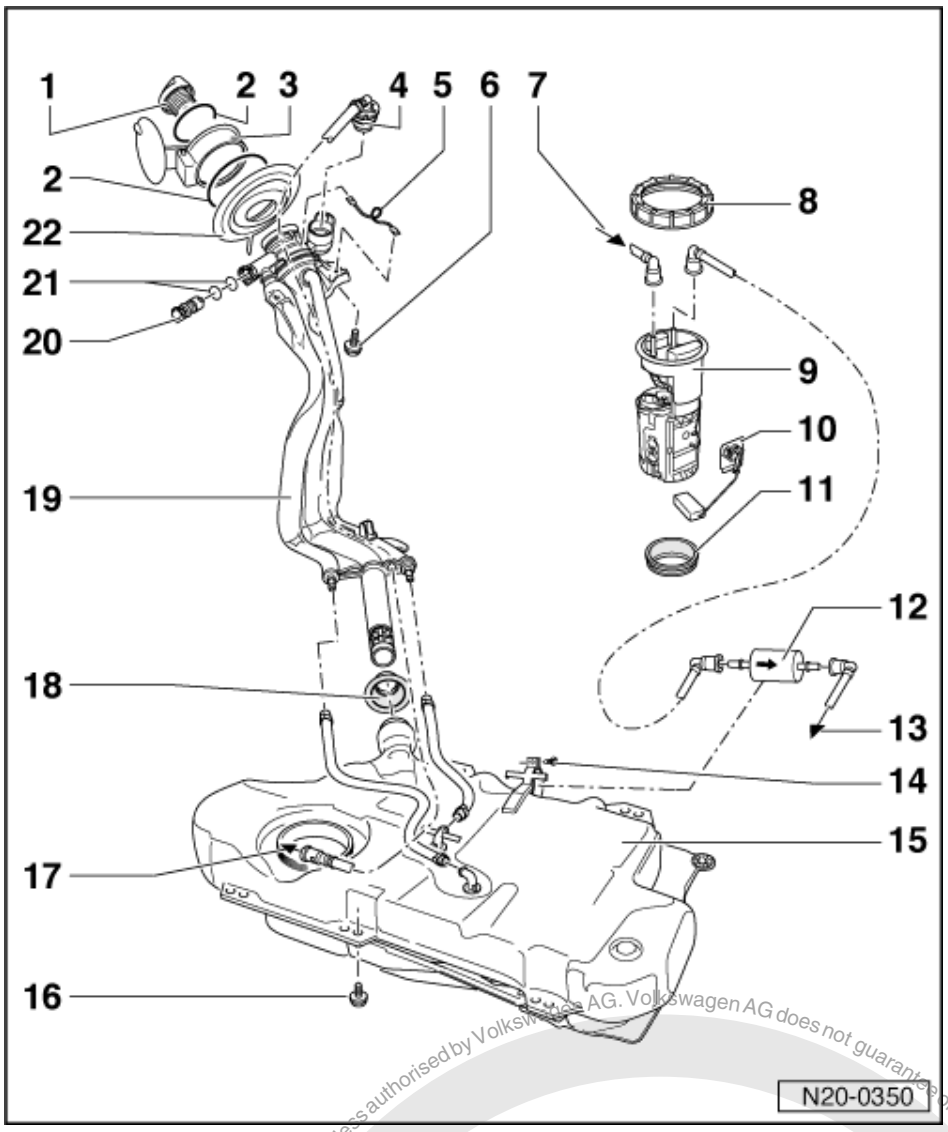

10 Fuel gauge sender

- Removing and installing => Page 117
- Adjusting:

=> Electrical system self-diagnosis; Repair group 01; Self-diagnosis of dash panel insert for vehicles 10.99 ▸; Checking fuel gauge (adaption) Self-diagnosis of dash panel insert for vehicles 10.99 ▸ Checking fuel gauge (adaption)

11 Sealing ring

- Coat with fuel when installing
- Renew if damaged

12 Fuel filter

- Fitting position: Arrow points in direction of flow

13 Supply pipe

- Black
- To fuel manifold

=> Repair group 24; Servicing injection system; Dismantling and assembling fuel rail with injectors Servicing injection system Dismantling and assembling fuel rail with injectors

Protected by copyright. Copyright by Volkswagen AG.
Copyright by Volkswagen AG. Volkswagen AG does not guarantee or accept any liability with respect to the correctness of information in this document. Copying for private or commercial purposes, in part or in whole, is not permitted unless authorised by Volkswagen AG.
satelettronica

Protected by copyright. Copying for private or commercial purposes, in part or in whole, is not permitted unless authorised by Volkswagen AG. Volkswagen AG does not guarantee or accept any liability with respect to the correctness of information in this document. Copyright by Volkswagen AG.

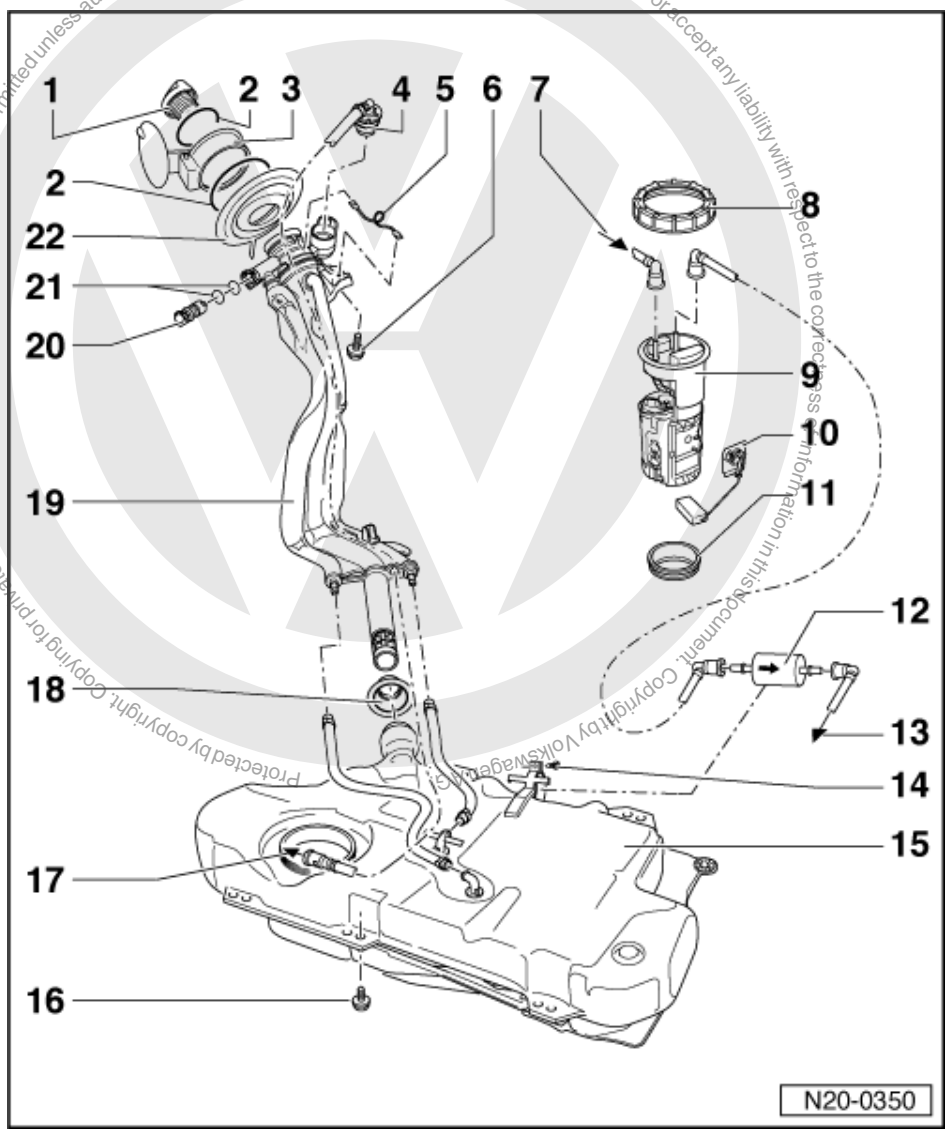

14 3 Nm

15 Fuel tank

- Removing and installing
  => Page 118
- Press clamping washer from heat shield tightly onto pins on vehicle floor

16 25 Nm

17 Vent pipe

- To activated charcoal filter
  =>Page 135 , item 5

18 Sealing boot

- After installing filler pipes fit over fuel tank connections, having turned boot inside out

19 Filler pipes

- With non-return valve

satelettronica

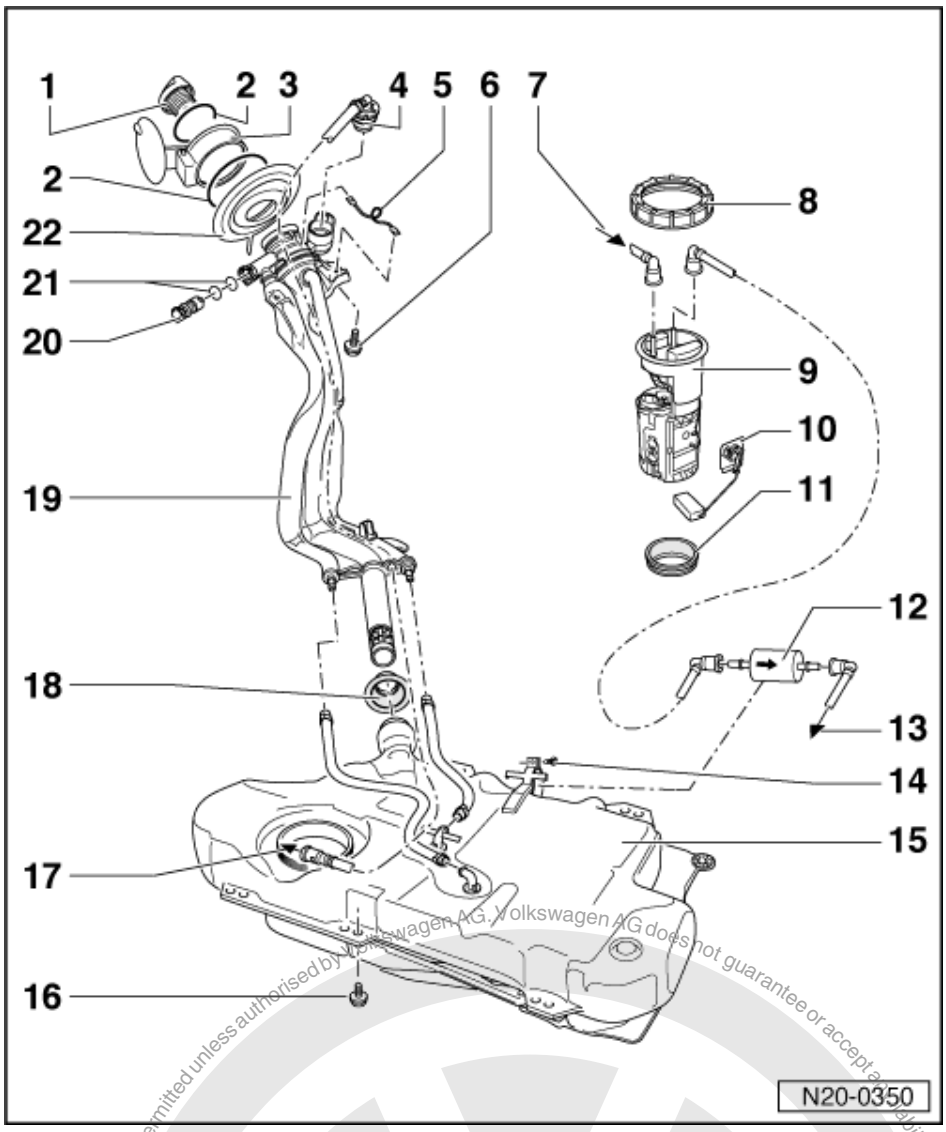

20 Vent valve

- Checking =>Fig. 2
- To remove pull locking latch lightly to inside -arrow- and pull valve out =>Fig. 2 -arrow-

21 O-ring

- Renew if damaged

22 Cup

- For filler pipes

Protected by copyright. Copying for private or commercial purposes, in any form or by any means, is not permitted unless authorised by Volkswagen AG. Volkswagen AG does not guarantee or accept any liability with respect to the correctness of information in this document. Copyright by Volkswagen AG.
satelettronica

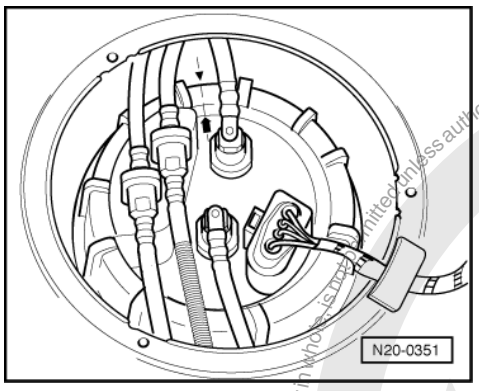

-> Fig. 1 Installation position of fuel delivery unit flange

Marking on the flange must align with marking on the fuel tank.

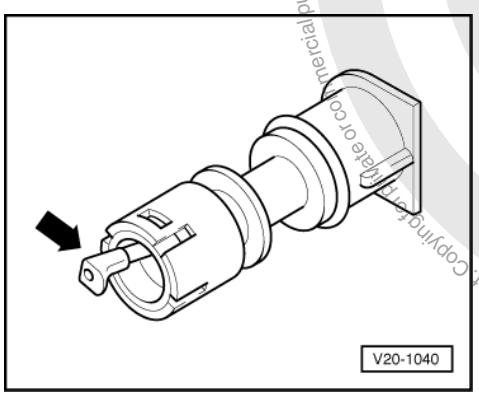

-> Fig. 2 Checking vent valve

Lever in rest position: Closed

Lever pushed in direction of arrow: Open

1.3 - Safety precautions when working on the fuel supply system

When removing and installing the fuel gauge sender or fuel pump (fuel delivery unit) from a full or partly full fuel tank the following must be observed:

Warning!
Fuel supply lines are under pressure! Before removing from hose connection wrap a cloth around the connection. Then release pressure by carefully pulling hose off connection.

- Before commencing work, switch on exhaust extraction system and place an extraction hose close to the sender opening in the fuel tank to extract escaping fuel fumes.
  If no exhaust extraction system is available, a radial fan (as long as motor is not in air flow) with a displacement greater than 15 m3/h can be used.
- Prevent skin contact with fuel! Wear fuel-resistant gloves!

- For safety reasons fuse No. 40 must be removed from fuse holder before opening the fuel system, otherwise the fuel pump can be activated by the door contact switch in driver's door.

Protected by copyright. Copying for private or commercial purposes, in part or in whole, is not permitted unless authorised by Volkswagen AG. Volkswagen AG does not guarantee or accept any liability with respect to the correctness of information in this document. Copyright by Volkswagen AG.
satelettronica

1.4 - Rules for cleanliness

When working on the fuel supply/injection system, pay careful attention to the following "5 rules":

- Thoroughly clean all unions and the adjacent areas before disconnecting.
- Place parts that have been removed on a clean surface and cover. Do not use fluffy cloths!
- Carefully cover opened components or seal, if the repair cannot be carried out immediately.
- Only install clean components:
  Only unpack replacement parts immediately prior to installation.
  Do not use parts that have been stored loose (e.g. in tool boxes etc.).
- When the system is open:
  Do not work with compressed air if this can be avoided.
  Do not move vehicle unless absolutely necessary.

1.5 - Crash fuel shut-off

Function

Vehicles with an airbag are fitted with a crash fuel shut-off system. It reduces the danger of a fire in a crash as the fuel pump is switched off via the fuel pump relay.
Simultaneously this system provides improved starting characteristics for the engine.
When the door is opened the fuel pump is activated for 2 seconds to build-up the pressure in fuel system.

When opening the fuel system:

Observe safety precautions=> Page 115 .

- Check fuel pump relay:

=> Current flow diagrams, Electrical fault finding and Fitting locations

1.6 - Removing and installing fuel delivery unit

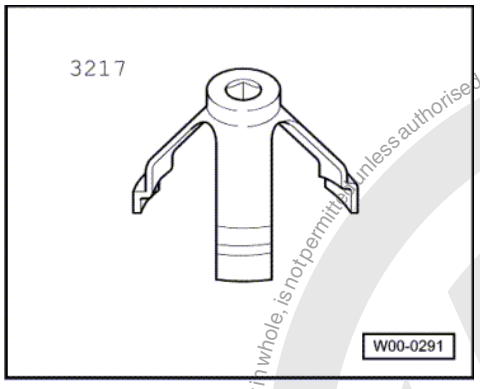

Special tools, workshop equipment, testers, measuring instruments and auxiliary items required

- -> 3217 Union nut spanner

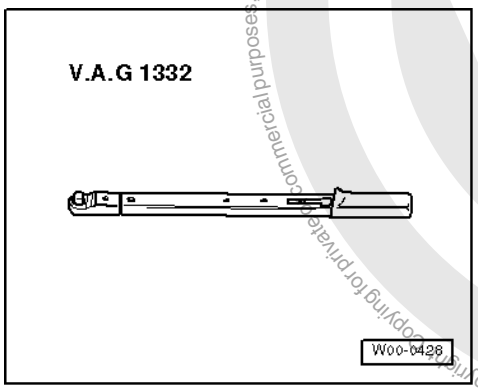

Protected by copyright. Copying for private or commercial purposes, in part or in whole, is not permitted unless authorised by Volkswagen AG. Volkswagen AG does not guarantee or accept any liability with respect to the correctness of information in this document. Copyright by Volkswagen AG.
satelettronica

- -> V.A.G 1332 Torque wrench (40...200 Nm)

Removing

- Note safety precautions before starting work => Page 115
- First check whether a coded radio is fitted. If this is the case obtain the anti-theft coding.

- With ignition switched off disconnect battery earth strap.
- Fold rear seat forwards.
- Remove floor cover.

> Warning!
> Fuel supply lines are under pressure! Before removing from hose connection wrap a cloth around the connection. Then release pressure by carefully pulling hose off connection.

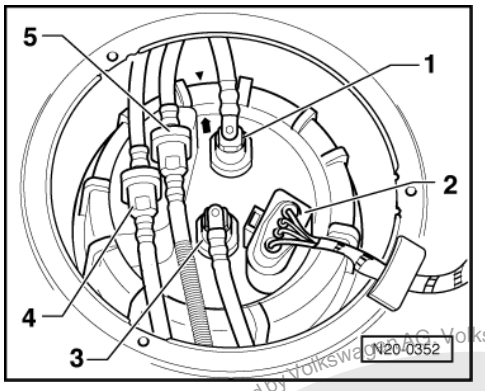

- -> Pull connector -2- supply pipe -3-, and return pipe -1- off flange.
- Disconnect supply pipe -4- and breather pipe -5-.
- Place all pipes outside of well.
- Place the spanner 3217 on the three rounded-off ribs on the union nut and unscrew union nut from flange.
- Pull delivery unit and seal out of the opening in fuel tank.

Note:

If the delivery unit is to be renewed then drain old delivery unit before disposal.

Installing

- Installation of the fuel delivery unit is carried out in the reverse order.

Notes:

- When inserting the fuel delivery unit ensure that the fuel gauge sender is not bent.
- Coat flange seal with fuel when fitting.
- Fitting position of fuel delivery unit flange => Page 115 , Fig. 1 .

1.7 - Removing and installing fuel gauge sender

Removing

- Remove fuel delivery unit
  => Page 116 .

satelettronica
Protected by copyright. Copying for private or commercial purposes, in part or in whole, is not permitted unless authorised by Volkswagen AG. Volkswagen AG does not guarantee or accept any liability with respect to the correctness of information in this document. Copyright by Volkswagen AG.

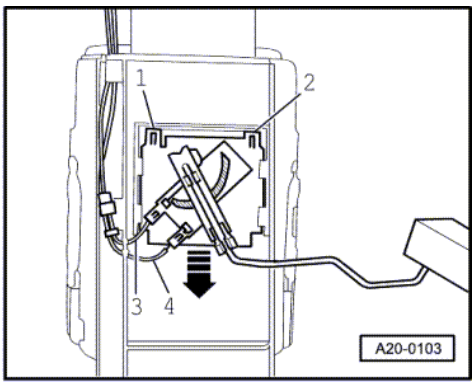

- -> Release and pull off the terminals for wires -3- and -4-.
- Lift retaining tabs -1- and -2- with a screwdriver and pull fuel gauge sender out downwards -arrows-.

Installing

- Insert fuel gauge sender in the guides on the fuel delivery unit and push up until it engages.

1.8 - Removing and installing fuel tank

Removing

- First check whether a coded radio is fitted. If this is the case obtain the anti-theft coding.
- With ignition switched off disconnect battery earth strap.
- Fold rear seat forwards.
- Remove cover in luggage boot floor.

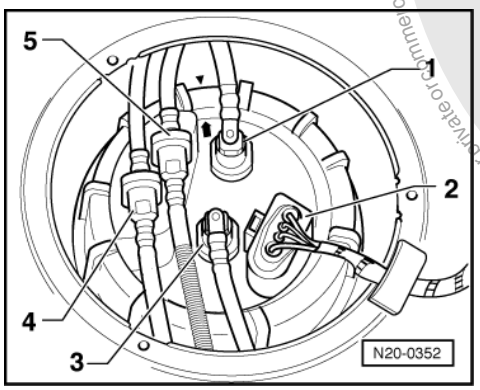

- -> Pull fuel return pipe -1- and connector -2- off flange.
- Disconnect fuel supply pipe -4- and breather pipe -5- at hose connections.
- Drain fuel tank.

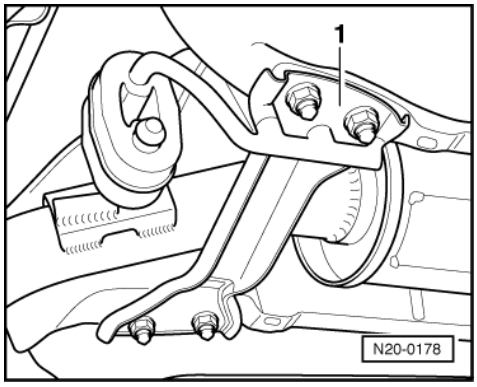

Protected by copyright. Copying for private or commercial purposes, in part or in whole, is not permitted unless authorised by Volkswagen AG. Volkswagen AG does not guarantee or accept any liability with respect to the correctness of information in this document. Copyright by Volkswagen AG.
satelettronica

- -> Remove support bracket -1- from body.
- Remove all rear exhaust system mountings from body. Then lower the exhaust system slightly and secure to body with wire.
- Remove rear right wheel.
- Detach filler pipe from body.
- Take filler cap off filler neck and detach filler neck from cup.
- Remove gravity/overflow valve => Page 110 , item 4 and attach with breather pipe to fuel tank.
- Remove filler neck.
- Now the fuel tank can be detached from body and removed together with the heat shield.

Installing

Installing is basically in the reverse order but note following:

- Install breather and fuel pipes kink-free.
- Do not interchange supply and return pipes (return pipe blue or with blue markings, supply pipe black).

1.9 - Checking fuel pump

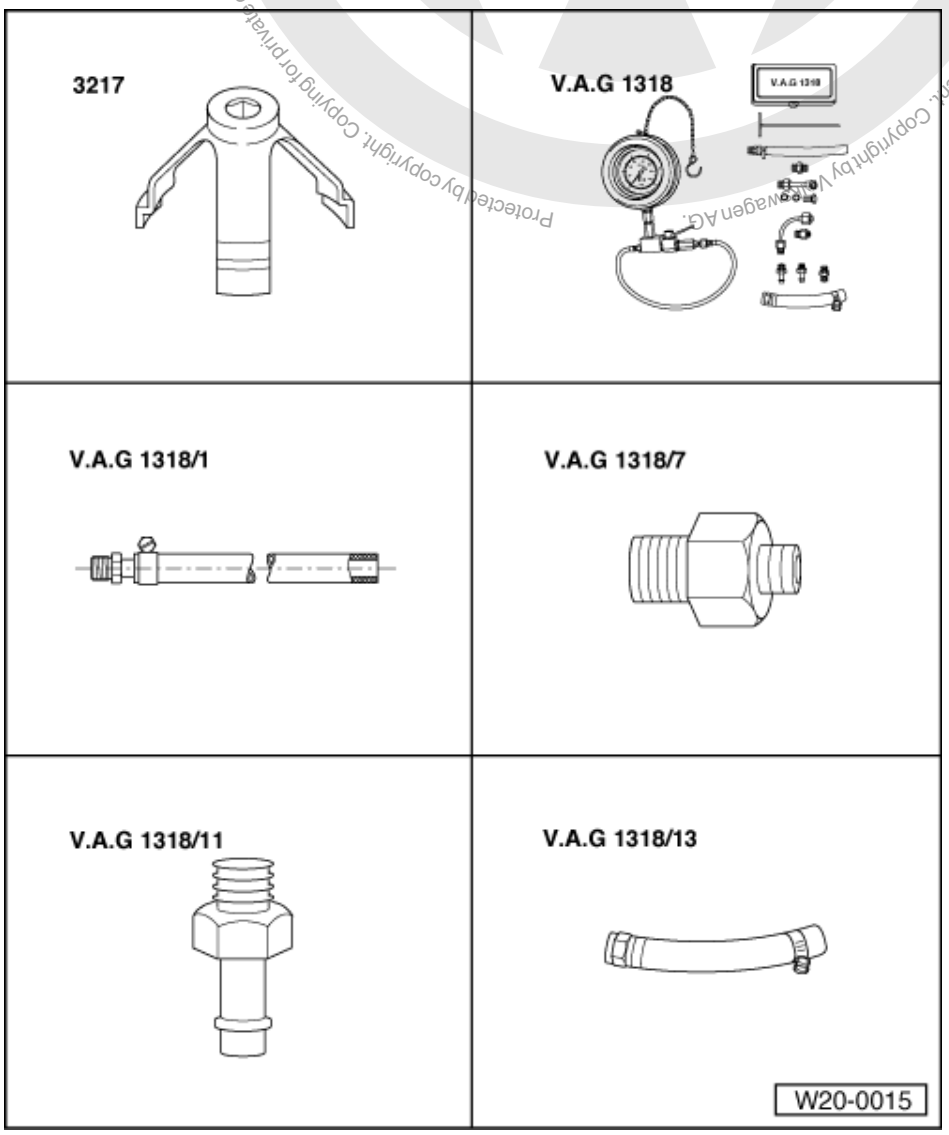

Special tools, workshop equipment, test and measuring appliances and auxiliary items required

Protected by copyright. Copying for private or commercial purposes, part or in whole, is not permitted unless authorised by Volkswagen AG. Volkswagen AG does not guarantee or accept any liability with respect to the correctness of information in this document. Copyright by Volkswagen AG.
satelettronica

- 3217 Spanner for union nut
- V.A.G 1318 Pressure gauge
- V.A.G 1318/1 Adapter
- V.A.G1318/7 Adapter
- V.A.G 1318/11 Adapter
- V.A.G 1318/13 Adapter

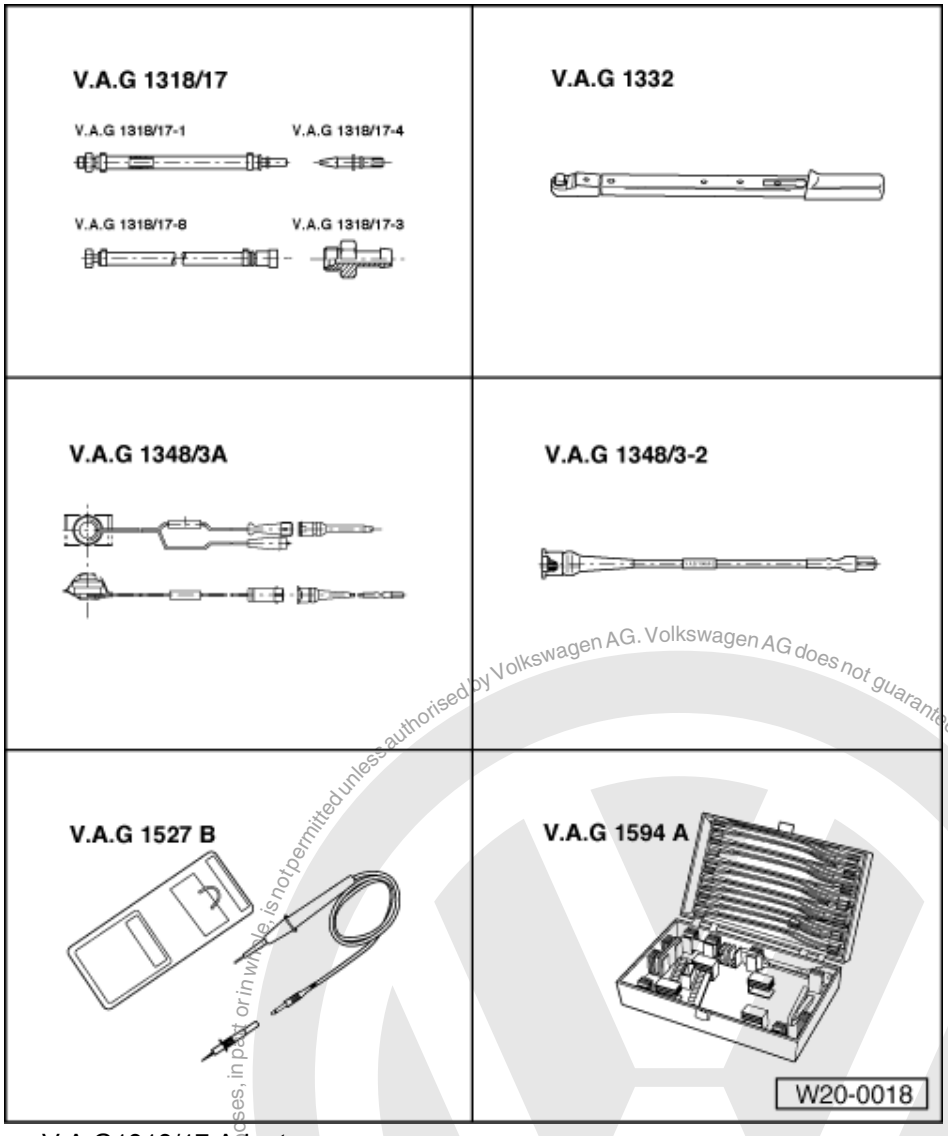

- V.A.G1318/17 Adapter
- V.A.G 1332 Torque wrench (40...200 Nm)
- V.A.G 1348/3 A Remote control
- V.A.G 1348/3-2 Adapter cable
- V.A.G 1527 B Diode test lamp
- V.A.G 1594 A Adapter set

Protected by copyright. Copying for private or commercial purposes, in part or in whole, is not permitted unless authorised by Volkswagen AG. Volkswagen AG does not guarantee or accept any liability with respect to the correctness of information in this document. Copyright by Volkswagen AG.
satelettronica

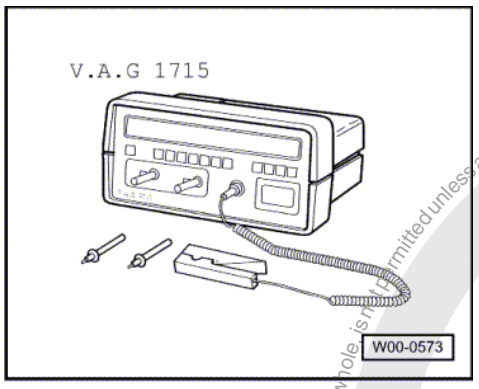

- -> V.A.G 1715 Multimeter
- Measuring container
- Current flow diagram

Note:

Observe functional description of crash fuel shut-off=> Page 116 .

Test sequence

Test conditions

- Battery voltage at least 11.5 V

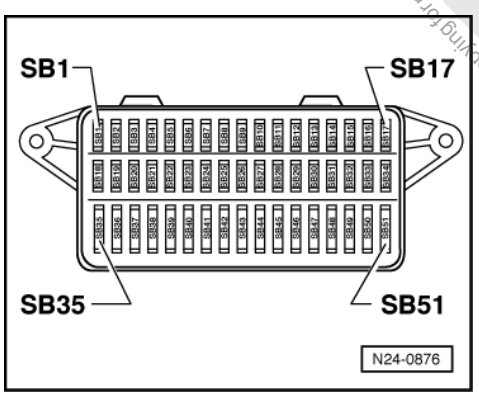

- -> Fuse SB40 OK.

Checking function and voltage supply

Note:

Check whether a coded radio is installed as during the forthcoming work sequences the battery earth strap must be disconnected. Obtain radio code first if necessary.

- Fold rear seat forwards.
- Remove floor cover.
- Briefly operate starter. Fuel pump must be heard to run briefly -approx. 1 second-.

If the fuel pump does not run:

- Switch off ignition.
- Remove cover in front of fuse holder.
- Pull fuse SB40 out of fuse holder.

Protected by copyright. Copying for private or commercial purposes, in part or whole, is not permitted unless authorised by Volkswagen AG. Volkswagen AG does not guarantee or accept any liability with respect to the correctness of information in this document. Copyright by Volkswagen AG.
satelettronica

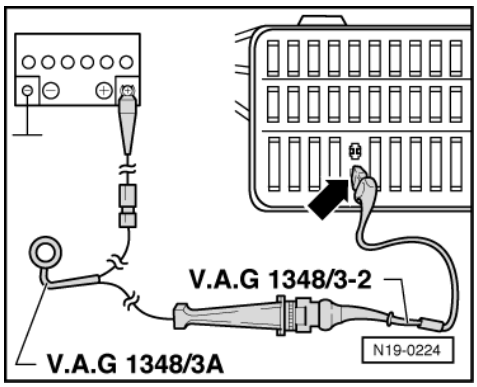

- -> Connect remote control V.A.G 1348/3A with adapter cable V.A.G 1348/3-2 to contact 40b -arrow- to fuel pump and battery positive (+).
- Operate remote control.

Fuel pump runs:

- Check activation of fuel pump relay:

=> Current flow diagrams, Electrical fault finding and Fitting locations

Fuel pump does not run:

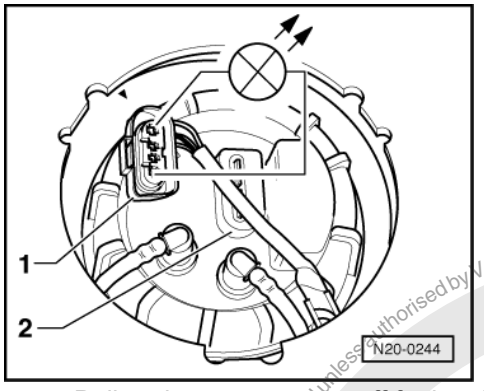

- -> Pull 4-pin connector -1- off fuel tank flange -2-.
- Connect diode test lamp V.A.G 1527 using aux. cables from V.A.G 1594 to the outer contacts of the connector.
- Operate remote control.
  LED must light up

LED does not light up:

- Locate and eliminate open circuit using current flow diagram

LED lights up (voltage supply OK.):

- Fit spanner 3217 on the three rounded ribs of union nut and unscrew union nut from flange.
- Check that the electrical wires between flange and fuel pump are connected.

If not open circuit can be found:

- Renew fuel delivery unit.

Checking delivery rate

Test conditions

• The voltage supply for the fuel pump OK.

Protected by copyright. Copying for private or commercial purposes, in part or in whole, is not permitted unless authorised by Volkswagen AG. Volkswagen AG does not guarantee or accept any liability with respect to the correctness of information in this document. Copyright by Volkswagen AG.
satelettronica

- Remote control V.A.G 1348/3A is still connected.

Test sequence

- Remove filler cap from fuel tank filler neck.

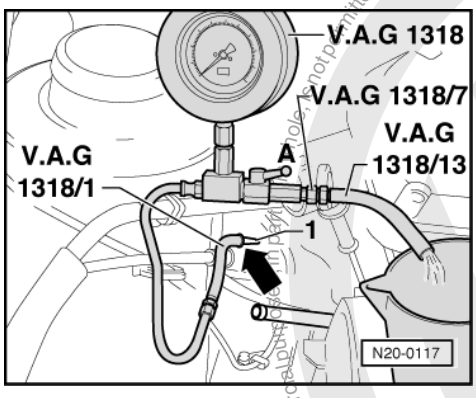

Warning!
Fuel supply lines are under pressure! Before removing from hose connection wrap a cloth around the connection. Then release pressure by carefully pulling hose off connection.

- -> Pull fuel supply hose (white marking) off fuel supply pipe -1-.
- Connect pressure gauge V.A.G 1318 with adapter /1 to fuel supply pipe.
- Screw adapter hose /13 with adapter /7 to pressure gauge and hold hose in measuring container.

- Open the pressure gauge shut-off tap. The lever then points in the direction of flow -A-.
- Operate remote control V.A.G 1348/3A and slowly close cut-off tap, until pressure gauge shows
  3 bar.
  From this point on do not move position of cut-off tap.
- Empty the measuring container.
- The fuel pump delivery range is dependent upon battery voltage. Therefore connect the multimeter with adapter cables from V.A.G 1594 to the vehicle battery.
- Operate remote control for
  30 seconds
  and measure battery voltage

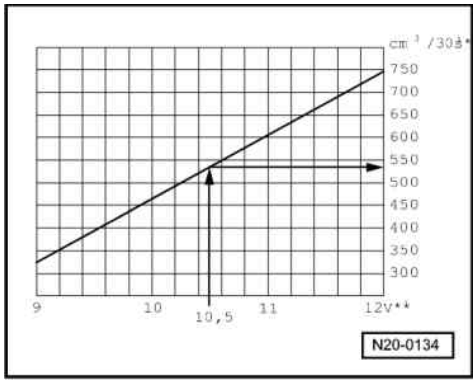

- -> Compare the quantity of fuel delivered with specification.

*) Minimum delivery cm3/30 seconds

**) Voltage at fuel pump with engine stopped and pump running (approx. 2 volts less than battery voltage).

Example:

Volkswagen AG. Volkswagen AG does not guarantee or accept any liability with respect to the correctness of information in this document. Copyright by Volkswagen AG.
Reproduction of this document or parts thereof is not permitted without written authorisation by Volkswagen AG.
Processed by copyright protection software.
satelettronica

During the test, a voltage of 12.5 volts is measured at the battery. As the voltage at the pump is approx. 2 volts less than the battery voltage, this will equate to a minimum delivery of 540 cm3/30 s.

If the minimum delivery rate is not attained:

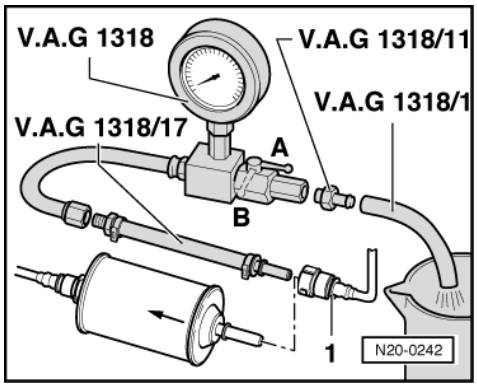

- Check the fuel pipes for possible restrictions (kinks) or blockages.
- -> Pull supply hose -1- off inlet to fuel filter.
- Connect pressure gauge V.A.G 1318 with adapter 1318/17 to fuel supply pipe.
- Repeat delivery rate check.

If the minimum delivery rate is now attained:

- Replace the fuel filter.

If the minimum delivery rate is again not attained:

- Remove the fuel delivery unit and check the strainer filter for soiling.

Only when up to now no fault has been detected:

- Replace the fuel delivery unit.

If the delivery rate has been attained but nevertheless you suspect a fuel supply system fault (e.g. intermittent failure of fuel supply system):

- Check the current draw of the fuel pump as follows:

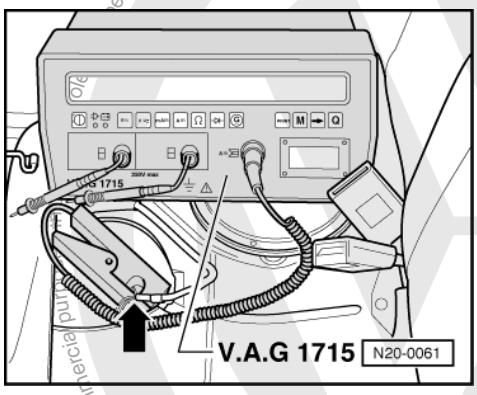

- Reconnect all disconnected fuel pipes.
- -> Connect the multimeter V.A.G 1715 using the current clamp to the red/yellow wire from wiring harness.
- Start the engine and run at idling speed.
- Measure the current draw of the fuel pump.
  Specification: max. 8 amps.

Protected by copyright. Copyright by Volkswagen AG.
Copyright by Volkswagen AG. Volkswagen AG does not guarantee, accept any liability with respect to the correctness of information in this document.
satelettronica

Note:

If the fuel system malfunction is intermittent, you can perform the check during a test drive with the help of a 2nd person.

If the current draw is exceeded:

- Replace the fuel delivery unit.

Checking fuel pump non-return valve

Test conditions

- Remote control V.A.G 1348/3A is still connected.
- Pressure gauge V.A.G 1318 is still connected.

Test sequence

Note:

With this check the fuel supply pipe connections from the fuel delivery unit to the point at which the pressure gauge V.A.G 1318 is connected will be checked for leaks at the same time.

- Close pressure gauge cut-off tap (lever at right angle to direction of flow).
- Operate remote control at short intervals until a pressure of
  3 bar
  has built up.

Warning! Danger of spray when opening the shut-offtap, hold container over the free connection of the pressure gauge.

- If pressure builds up too high, lower excess pressure by carefully opening the shut-off tap.
- Watch pressure drop. After 10 minutes the pressure must not drop below
  2 bar.

If the pressure drops further:

- Check pipe connections for leaks.

If no fault is detected in the wiring:

- Replace the fuel delivery unit.

2 - Electronic power control (EPC)

2.1 - Electronic power control (EPC)

2.2 - Function of EPC system

With the EPC system the throttle valve is not operated by a cable. There is no mechanical connection between accelerator and throttle valve.

The position of the accelerator is transmitted to the engine control unit by two accelerator position senders (variable resistors together in a housing) which are connected to the accelerator pedal.

Copyright by Volkswagen AG. Volkswagen AG does not guarantee or accept any liability with respect to the correctness of information in this document. Copyright by Volkswagen AG. Photocopy, copying for private or commercial purposes, in part or in whole, is not permitted unless authorised by Volkswagen AG.
satelettronica

The position of the accelerator (drivers requirement) is the main input value for the engine control unit.

The throttle valve is operated over the complete revolution and load range by an electric motor (throttle valve positioner) in the throttle valve control part.

The throttle valve is operated by the throttle valve positioner which is controlled by the engine control unit.

When the engine is not running and the ignition is switched on the engine control unit moves the throttle valve exactly as prescribed by the accelerator pedal position sender. This means that when the accelerator is depressed halfway the throttle valve positioner opens the throttle valve by the same amount, the throttle is then approximately half open.

When the engine is running (under load) the engine control unit can open or close the throttle valve independently of the accelerator pedal position sender.

This means that the throttle valve can already be completely open even though the accelerator pedal is depressed half way.

This also gives vastly improved consumption and exhaust emission levels at certain load conditions.

The torque required by the engine can be produced by the engine control unit by optimising the combination of throttle valve cross-section and charge pressure.

It is incorrect to believe that the "EPC" is comprised of one or two components only. The EPC is a system, which is comprised of all components which have an influence, control or monitor the position of the throttle valve, e.g. the accelerator pedal position sender, the throttle valve control unit, the EPC warning lamp, the engine control unit.

Observe safety precautions=> Page 115 .

Observe rules for cleanliness => Page 116 .

Checking electronic accelerator warning lamp => Page 128 .

Protected by copyright. Copying for private or commercial purposes, in whole, is not permitted unless authorised by Volkswagen AG. Volkswagen AG does not guarantee or accept any liability with respect to the correctness of information in this document. Copyright by Volkswagen AG.
satelettronica

2.3 - Servicing parts of electronic power control (EPC)

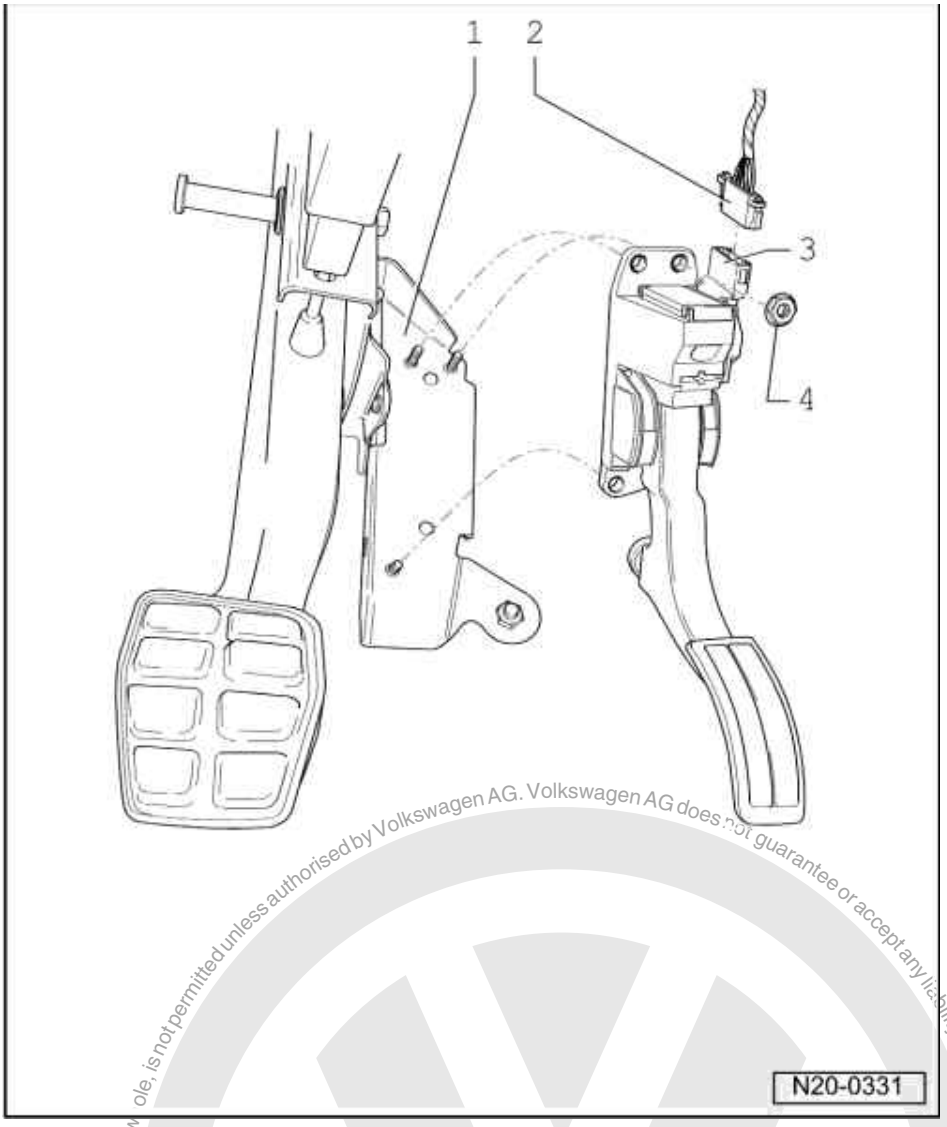

1 Bracket
- Removing and installing

=> Brake systems; Repair group 24; Brake pedal overview Brake pedal overview

2 Connector
- Black, 6-pin

3 Accelerator pedal position sender (G79 and G185)
- Not adjustable
- The accelerator pedal position passes the position of the pedal on to the engine control unit
- Remove footwell cover to remove sender
- Checking =>Page 130

4 10 Nm

Protected by copyright. Copying for private or commercial purposes, in part or in whole, is not permitted unless authorised by Volkswagen AG. Volkswagen AG does not guarantee or accept any liability with respect to the correctness of information in this document. Copyright by Volkswagen AG.
satelettronica

2.4 - Checking electronic accelerator warning lamp

Note:

The electronic accelerator warning lamp -K132 is known also as the EPC warning lamp.

Special tools, workshop equipment, testers, measuring instruments and auxiliary items required

- Test box V.A.G 1598/22
- Hand multimeter V.A.G 1526 or multimeter V.A.G 1715
- Adapter set V.A.G 1594
- Current flow diagram

Check conditions

- The fuses must be OK.
- The battery voltage must be at least 11.5 V.

Checking function of warning lamp

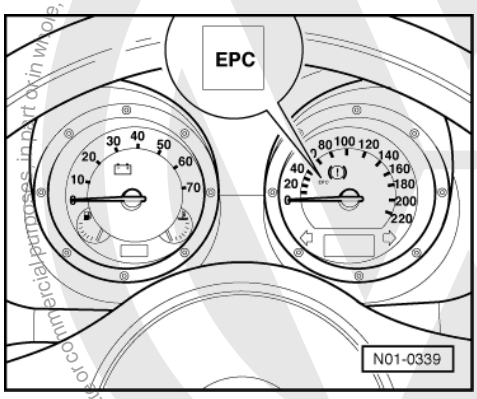

- Switch on ignition.

  -> The EPC warning lamp must light up.

- Start engine and run at idling speed.

  The EPC warning lamp must go out when no EPC fault has been stored.

- Switch off ignition.

Electronic accelerator warning lamp does not light up

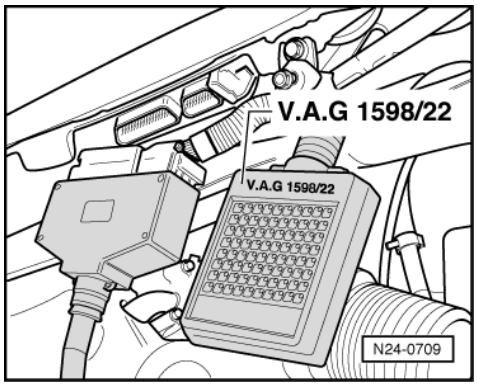

- Remove wiper arms and cowl panel:

satelettronica

=> Electrical system; Repair group 92; Servicing windscreen wiper system Servicing windscreen wiper system

- -> Connect test box V.A.G 1598/22 to control unit wiring harness.
- Bridge test box sockets 2 + 30 with aux. cables from V.A.G 1594.

- Switch ignition on.
  The fault lamp must light up

If the fault lamp does not light up:

- Switch off ignition.
- Remove dash panel insert and check the bulb and its voltage supply.:

=> Electrical system; Repair group 90; Dash panel insert; Removing and installing dash panel insert Dash panel insert Removing and installing dash panel insert

If no fault is found:

- Check wiring for open circuit between test box socket 30 and dash panel insert using current flow diagram:

=> Current flow diagrams, Electrical fault finding and Fitting locations

If no wiring fault is detected:

- Renew engine control unit:

=> Repair group 24; Engine control unit; Renewing engine control unit Engine control unit Renewing engine control unit

Electronic accelerator fault lamp lights up continuously

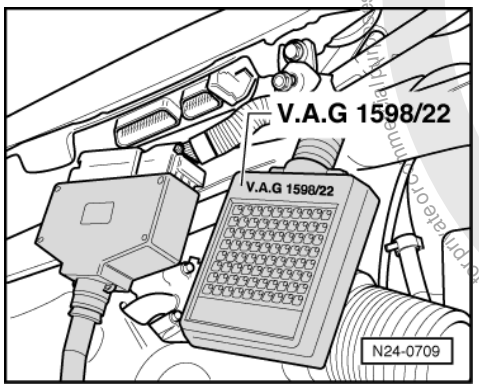

- -> Connect test box V.A.G 1598/22 to control unit wiring harness.
- Check wiring for short to earth between test box socket 30 and dash panel insert using current flow diagram:

=> Current flow diagrams, Electrical fault finding and Fitting locations

If no wiring fault is detected:

- Renew engine control unit:

=> Repair group 24; Engine control unit; Renewing engine control unit Engine control unit Renewing engine control unit

satelettronica

2.5 - Checking accelerator pedal position sender

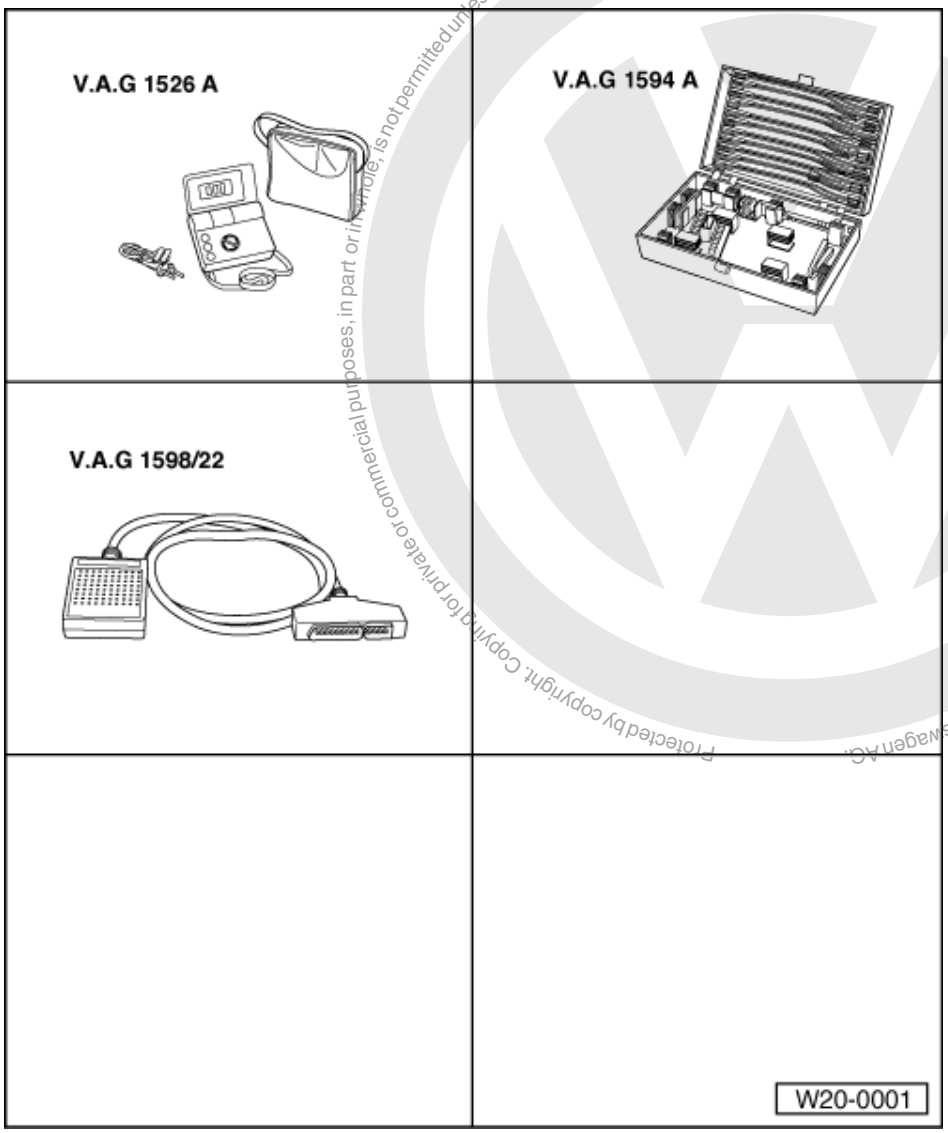

Special tools, workshop equipment, test and measuring appliances and auxiliary items required

- V.A.G 1526 Hand multimeter
- V.A.G 1594 A Adapter set
- V.A.G 1598/22 Test box
- Fault reader V.A.G 1551 or vehicle system tester V.A.G 1552 with cable V.A.G 1551/3A
- Current flow diagram

Function

Both accelerator pedal position senders -G79- and -G185- on the accelerator pedal pass the driver's requirements on to the engine control unit independently of one another. Both senders are installed together in a housing.

Check conditions

- The fuses must be OK.
- The battery voltage must be at least 11.5 V.

Protected by copyright. Copyright for private or commercial purposes, in part or in whole, is not permitted unless authorised by Volkswagen AG. Volkswagen AG does not guarantee or accept any liability with respect to the correctness of information in this document. Copyright by Volkswagen AG.
satelettronica

Test sequence

- Connect fault reader V.A.G 1551 (V.A.G 1552) and with ignition switched on select engine electronics control unit with the "Address word" 01:

=> Repair group 01; General to self-diagnosis; Connecting fault reader V.A.G 1551 and selecting engine control unit General to self-diagnosis Connecting fault reader V.A.G 1551 and selecting engine control unit

-> Indicated on display:

```
Rapid data transfer      HELP
Select function XX
```

- Press keys 0 and 8 for the function "Read measured value block" and confirm entry with Q key.

-> Indicated on display:

```
Read measured value block
Input display group number XXX
```

- Press keys 0, 6 and 2 for the "Display group number 62" and confirm entry with Q key.

-> Indicated on display:
(1...4 = Display zones)

```
Read measured value block 62
     1     2     3     4
```

- Check specifications of sender 1 (G79) at idling stop in display zone 3.
  Specification: 12...97 %
- Check specifications of sender 2 (G185) at idling stop in display zone 4.
  Specification: 4...49 %

Note:

The engine control unit calculates the voltage values of the angle sender in percent relative to 5 Volt and displays these as a percentage figure (5 Volt supply voltage equates to 100 %).

- Operate the accelerator pedal slowly until fully depressed and observe the angle sender figures in display zones 3 and 4:

  The percent figures in display zone 3 must rise evenly. The tolerance range of 12...97 % is not covered completely.
  The percent figures in display zone 4 must rise evenly. The tolerance range of 4...49 % is not covered completely.

Note:

The figure displayed in display zone 3 must always be approximately double that displayed in display zone 4.

End specification value not achieved:

- Press the ⇒key.
- Press keys 0 and 6 for the function "End output" and confirm entry with the Q key.
- Switch off ignition.
- Check accelerator pedal position sender voltage supply and wiring connections =>Page 131 .

Checking voltage supply and wiring to control unit

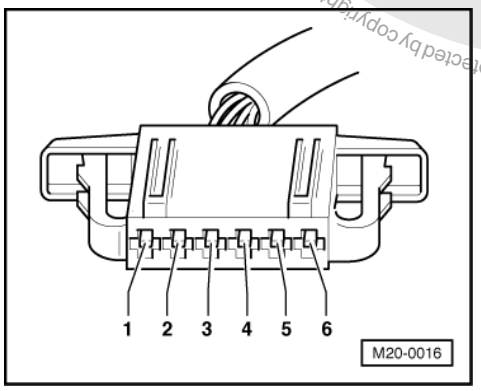

Protected by copyright. Copyright by Volkswagen AG. Volkswagen AG does not guarantee or accept any liability with respect to the correctness of information in this document. Copyright by Volkswagen AG. Reproduction or transmission to third parties is not permitted without the express consent of Volkswagen AG.
satelettronica

- Remove cover in footwell (driver's side).
- Disconnect 6-pin connector for accelerator pedal position sender.
- Switch ignition on.
- -> Connect multimeter to measure voltage at the following contacts of the connector:
  Contact 1 + earth
  Contact 1 + 5
  Contact 2 + earth
  Contact 2 + 3
  Specification: minimum 4.5 V

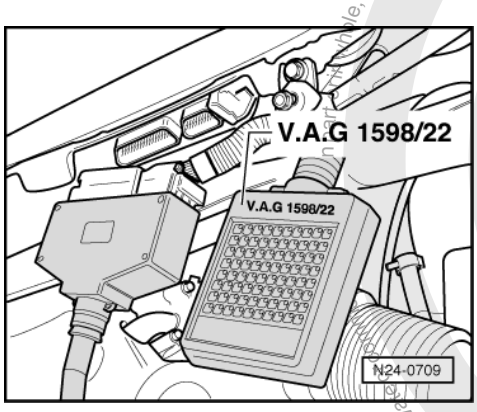

- Remove wiper arms and cowl panel:

=> Electrical system; Repair group 92; Servicing windscreen wiper system Servicing windscreen wiper system

- -> Connect test box V.A.G 1598/22 to control unit wiring harness.

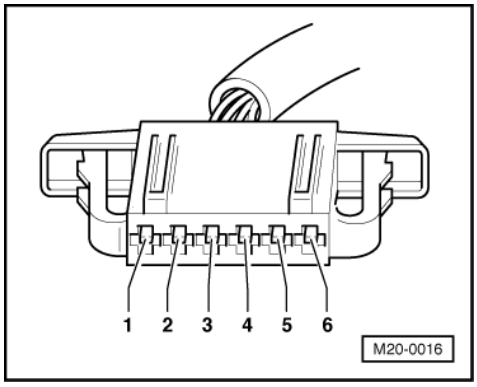

- -> Check wiring for open circuit between test box and 6-pin connector (connector to control unit) using current flow diagram.
  Contact 1+socket 6
  Contact 2+socket 8
  Contact 3+socket 7
  Contact 4+socket 33
  Contact 5+socket 19
  Contact 6+socket 45
  Wire resistance: Max. 1.5 ω
- Additionally check wires for short to one another, to vehicle earth and to battery positive.
  Specification: ∞ω

If voltage supply is OK and no wiring fault is detected:

- Renew accelerator pedal position sender
  => Page 127 , item 3

If voltage supply is not OK and no wiring fault is detected:

- Renew engine control unit:

Protected by copyright. Copyright by Volkswagen AG.
Copyright by Volkswagen AG does not guarantee or accept any liability with respect to the correctness of information in this document. Copyright by Volkswagen AG. Copyright, reproduction, distribution, translation, microfilm, storage and processing in electronic media, is not permitted unless authorised by Volkswagen AG.
satelettronica

=> Repair group 24; Engine control unit; Renewing engine control unit Engine control unit Renewing engine control unit

3 - Activated charcoal filter system

3.1 - Activated charcoal filter system

3.2 - Function

Depending upon the air pressure and ambient temperature, fuel vapour will form above the level of fuel in the tank.

The activated charcoal filter system prevents these HC emissions escaping to the atmosphere.

In limited quantities, fuel vapours pass through a gravity valve (which closes at an angle of 32 °) located at the highest point in the tank and through a breather valve into the activated charcoal filter.

The activated charcoal stores these vapours like a sponge.

When the Lambda control is active when driving (engine warm), the tank venting valve (N80), also known as the regeneration valve), is activated (pulsed) from engine control unit depending upon load and engine speed. The opening period is dependent on the input signals.

Intake manifold vacuum draws fresh air through the vent opening on the underside of the activated charcoal filter during the purging procedure (regenerating the activated charcoal). The fuel vapours stored in the activated charcoal and fresh air are pulse-fed for combustion.

The breather valve prevents fuel vapours from being drawn from the tank when the tank venting valve is open and intake manifold vacuum is present. It therefore ensures that the evacuation of the activated charcoal filter has priority.

No voltage (e.g. wiring open circuit) the tank venting valve is closed. The activated charcoal filter will not be purged.

Notes:

- Hose connections are secured with either spring-type or clamp-type clips.
- Always replace clamp-type clips with spring-type clips.
- V.A.G 1921 or VAS 5024 pliers are recommended when installing spring-type clips.

Observe safety precautions=> Page 115 .

Observe rules for cleanliness => Page 116 .

Protected by copyright. Copyright by Volkswagen AG. Not permitted for commercial purposes, in part or in whole, without the express authority by Volkswagen AG. Volkswagen AG does not guarantee or assume any liability with respect to the correctness of information in this document.
satelettronica

3.3 - Servicing parts of the activated charcoal filter system

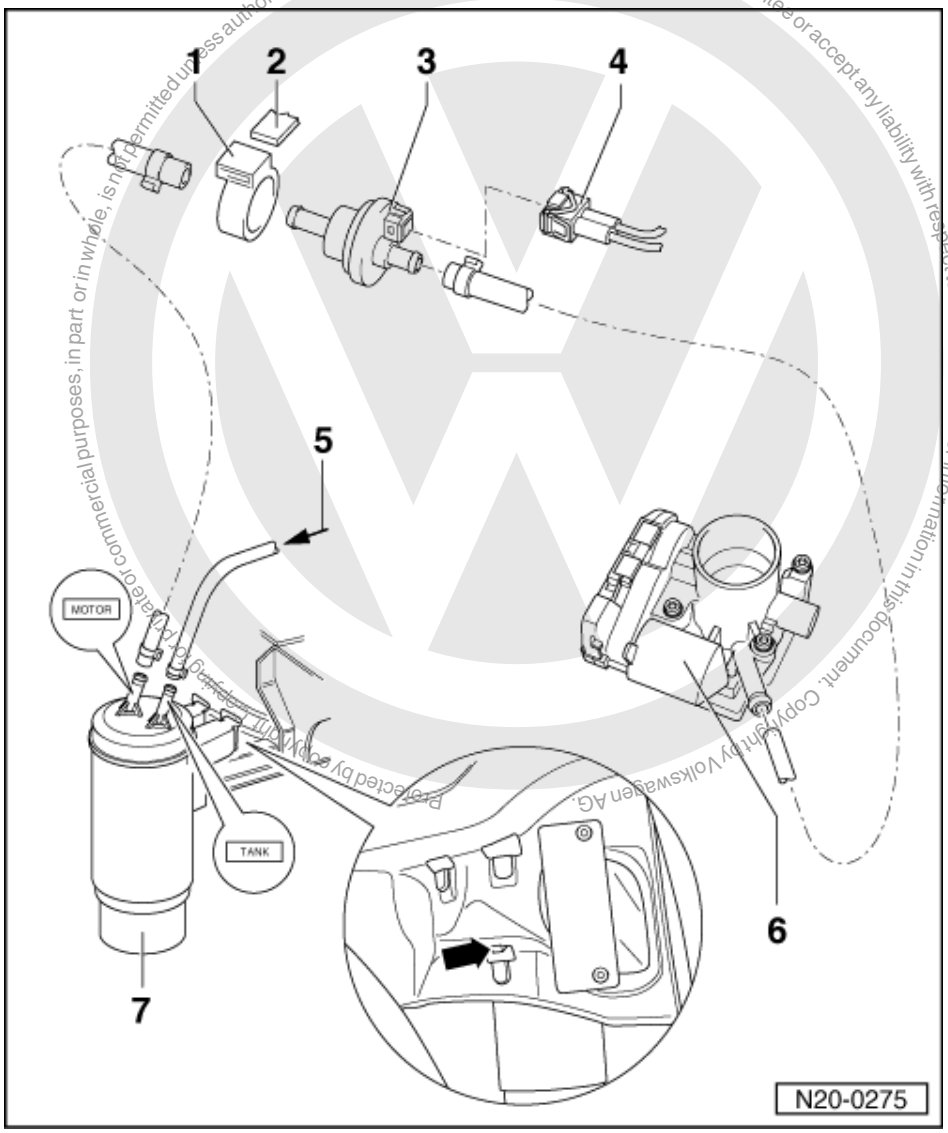

1 Retaining ring

2 Bracket
- On body front right

3 Tank venting valve for activated charcoal filter (N80)
- Valve closed with ignition switched off
- When the engine is warm the valve will be activated from the engine control unit (pulsed)
- Check tank venting valve => Page 135
- Check activation of tank venting valve:

=> Repair group 01; Final control diagnosis; Performing final control diagnosis Final control diagnosis Performing final control diagnosis

4 Connector

satelettronica

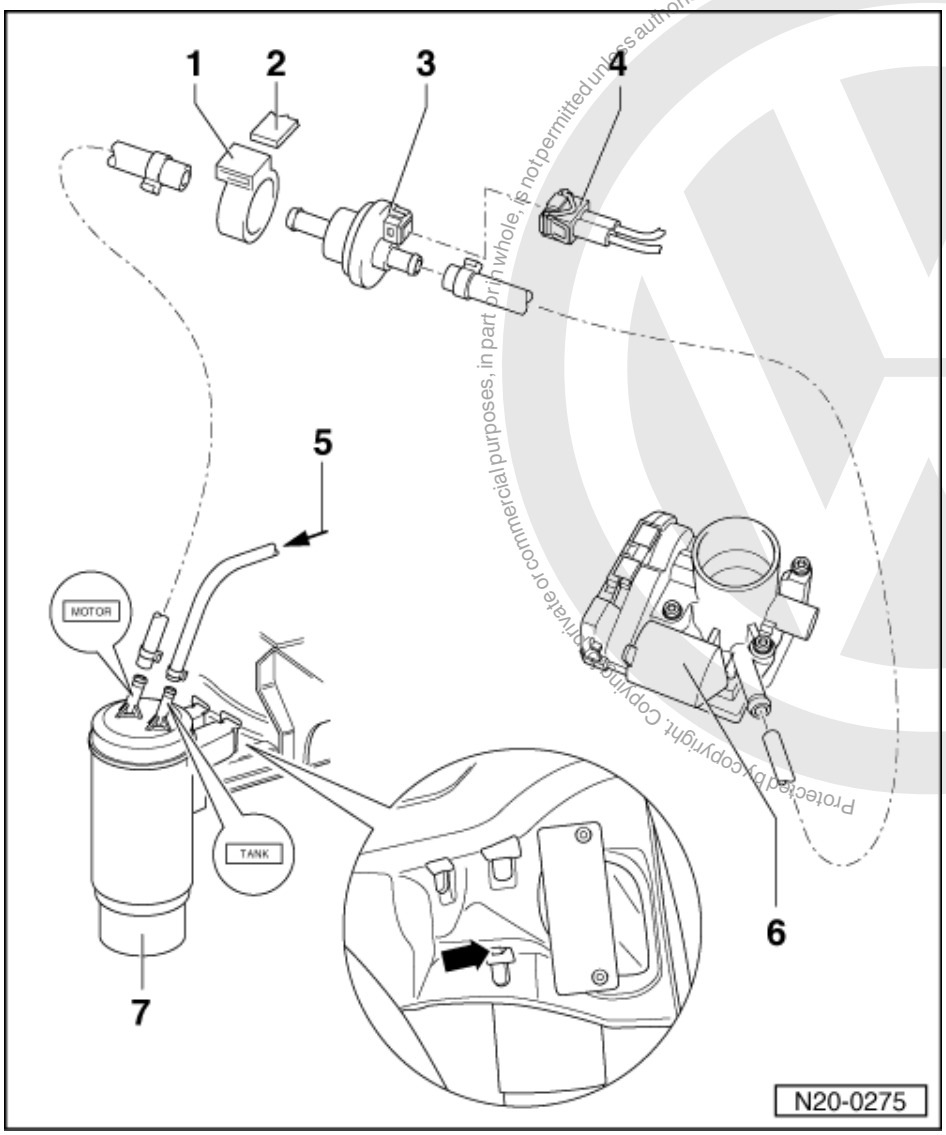

5 Breather pipe
- From gravity/overflow valve on fuel tank
  => Page 113 , item 17

6 Throttle valve control part

7 Activated charcoal filter
- Location: in front right wheel housing
- Connection "MOTOR" to solenoid valve 1 item - 3 -
- Connection "TANK" with vacuum non-return valve
- To remove, release securing tab -arrow- and push container out upwards

3.4 - Checking tank venting valve

Note:

Tank venting valve is closed when no current is supplied.

Checking activation:

Protected by copyright. Copyright by Volkswagen AG. Volkswagen AG. Volkswagen AG does not guarantee or accept any liability with respect to the correctness of information in this document. Copyright by Volkswagen AG.
satelettronica

=> Repair group 01; Final control diagnosis; Performing final control diagnosis Final control diagnosis Performing final control diagnosis

Special tools, workshop equipment, testers, measuring instruments and auxiliary items required

- Fault reader V.A.G 1551 or vehicle system tester V.A.G 1552 with cable V.A.G 1551/3A

Test conditions

- Fuse No. 1 must be OK.
- Coolant temperature must be at least 80 °C, =>display group 04, display zone 3.

Functional check

- Connect fault reader V.A.G 1551 (V.A.G 1552). Start engine and select the engine control unit with the "Address word" 01. Connecting fault reader and selecting engine control unit:

=> Repair group 01; General to self-diagnosis; Connecting fault reader V.A.G 1551 and selecting engine control unit General to self-diagnosis Connecting fault reader V.A.G 1551 and selecting engine control unit

-> Indicated on display:

```
Rapid data transfer     HELP
Select function XX
```

- Press keys 0 and 4 for the function "Initiating basic settings" and confirm entry with Q key.

-> Indicated on display:

```
Basic setting
Input display group number XXX
```

- Press keys 0, 7 and 0 for "Display group number 70" and confirm entry with Q key.

-> Indicated on display:
(1...4 = Display zones)

```
System in basic setting     70
     1     2     3     4
```

Note:

The engine must not be loaded during this diagnosis because the diagnosis will be interrupted and will not be started again until the engine is revved-up.

When the diagnosis is initiated by the engine control unit the display in display zone 4 jumps from "Test OFF" to "Test ON"

- Run engine at idling speed until the
  Specification "TVV OK"
  is displayed in display zone 4.

If the display indicates as described:

- Press ⇒key.
- Press keys 0 and 6 for the function "End output" and confirm entry with the Q key.
- Switch off ignition.

If the display does not indicate as described:

- Press ⇒key.
- Introduce final control diagnosis and activate tank venting valve (N80):

=> Repair group 01; Final control diagnosis; Performing final control diagnosis Final control diagnosis Performing final control diagnosis

Protected by copyright. Copying for private or commercial purposes, in part or in whole is not permitted unless authorised by Volkswagen AG. Volkswagen AG does not guarantee or accept any liability with respect to the correctness of information in this document. Copyright by Volkswagen AG.
satelettronica

- Interrogate fault memory:

=> Repair group 01; Fault memory; Interrogating and erasing fault memory of engine control unit Fault memory Interrogating and erasing fault memory of engine control unit

3.5 - Checking fuel tank breather

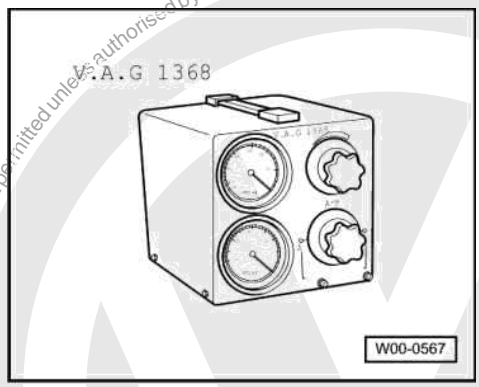

Special tools, workshop equipment, testers, measuring instruments and auxiliary items required

- -> V.A.G 1368 Vacuum tester

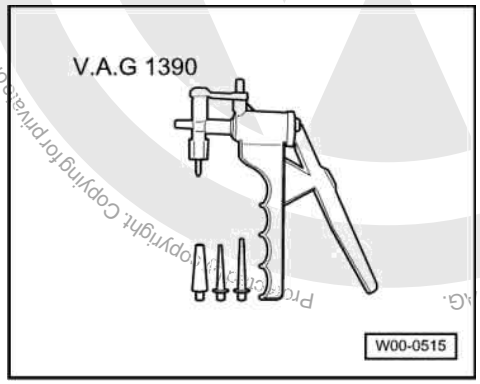

- -> V.A.G 1390 Hand vacuum pump

Test conditions

- Ignition must be switched off

satelettronica

Test sequence

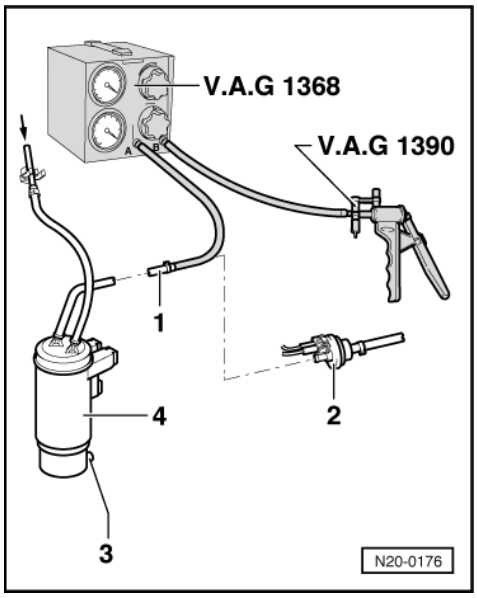

- -> First pull vent hose -1- from activated charcoal filter off tank venting valve -2-.
- Connect hand vacuum pump V.A.G 1390 and vacuum tester V.A.G 1368 as shown to hose -1-.
- Set vacuum tester to -A/B- position.
- Operate hand vacuum pump V.A.G 1390 several times.
  Vacuum must not
  build up.

If vacuum builds up:

- Check breather connection -3- located on bottom of activated charcoal filter -4- for soiling, clean if necessary.

If vacuum does not build up:

- Temporarily seal breather connection -3- and operate vacuum pump again several times.
  A vacuum must build up.
  (Vacuum non-return valve in activated charcoal filter must close).

If vacuum does not build up:

- Renew activated charcoal filter.

Checking lines to fuel tank and fuel cap

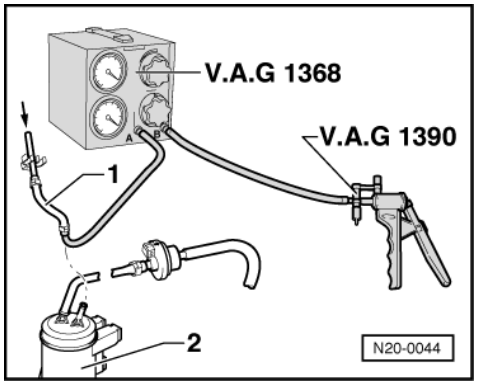

- -> Pull vent hose -1- from fuel tank off activated charcoal filter -2-.
- Connect hand vacuum pump V.A.G 1390 and vacuum tester V.A.G 1368 as shown to hose -1-.
- Set vacuum tester to -A/B- position.
- Remove fuel filler cap from filler neck.
- Operate V.A.G 1390 several times. Vacuum must

Protected by copyright. Copying for private or commercial purposes, in part or in whole, is not permitted unless authorised by Volkswagen AG. Volkswagen AG does not guarantee or accept any liability with respect to the correctness of information in this document. Copyright by Volkswagen AG.
satelettronica

not build-up.

If vacuum builds-up:

- Check gravity/overflow valve => Page 110 , item 4
- Check line -1- from fuel tank for blockage.

If vacuum does not build up:

- Refit fuel filler cap.
- Operate hand vacuum pump V.A.G 1390 several times.
  Vacuum must not
  build up.

Note:

If the fuel level in the tank is low the hand vacuum must be operated at least 20...30 times.

If vacuum builds up:

- Replace fuel tank cap.

Protected by copyright. Copying for private or commercial purposes, in part or in whole, is not permitted unless authorised by Volkswagen AG. Volkswagen AG does not guarantee or accept any liability with respect to the correctness of information in this document. Copyright by Volkswagen AG.

satelettronica

26 - Exhaust system

1 - Removing and installing parts of exhaust system

1.1 - Removing and installing parts of exhaust system

Notes:

- After working on the exhaust system ensure that the system is not under stress, and that it has sufficient clearance to the bodywork. If necessary, loosen double clamp(s) and align silencer and exhaust pipe so that sufficient clearance is maintained to the bodywork and the support rings are evenly loaded.
- Renew self-locking nuts.
- Components marked with * will be checked by self-diagnosis:

=> Repair group 01; Fault memory; Interrogating and erasing fault memory of engine control unit Fault memory Interrogating and erasing fault memory of engine control unit

- Check catalyst => Page 147 .

Protected by copyright. Copyright by Volkswagen AG. Volkswagen AG does not guarantee or assume any liability with respect to the correctness of information in this document. Copyright by Volkswagen AG.
satelettronica

1.2 - Exhaust manifold, front exhaust pipe and catalyst with attachments

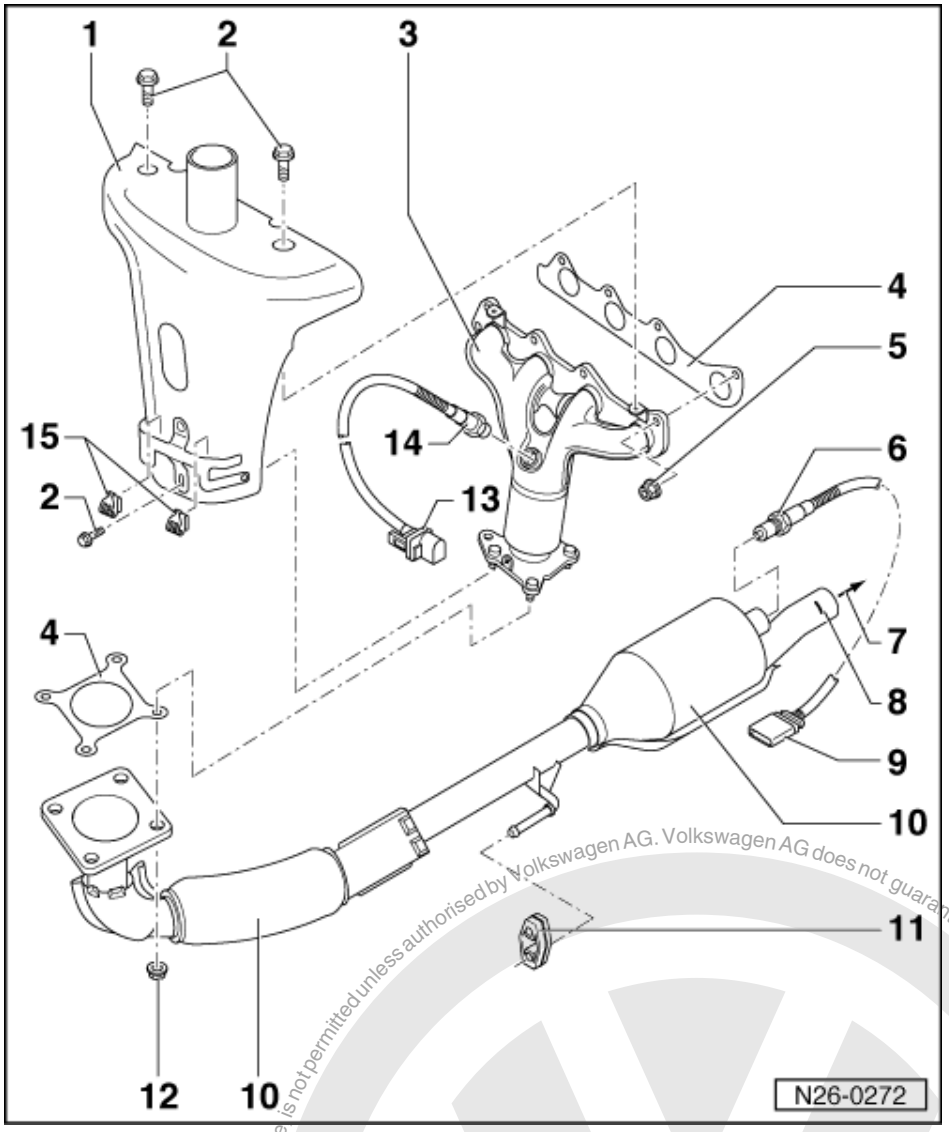

1 Warm air collector plate
2 10 Nm
- Note tightening sequence
  Page => 145 Fig. 1

3 Exhaust manifold
- With integrated pre-catalyst only engine codes AKP, AUC or AUD

4 Gasket
- Renew

5 Lock nut, 25 Nm

Protected by copyright. Copying for private or commercial purposes, in part or in whole, is not permitted unless authorised by Volkswagen AG. Volkswagen AG does not guarantee or accept any liability with respect to the correctness of information in this document. Copyright by Volkswagen AG.
satelettronica

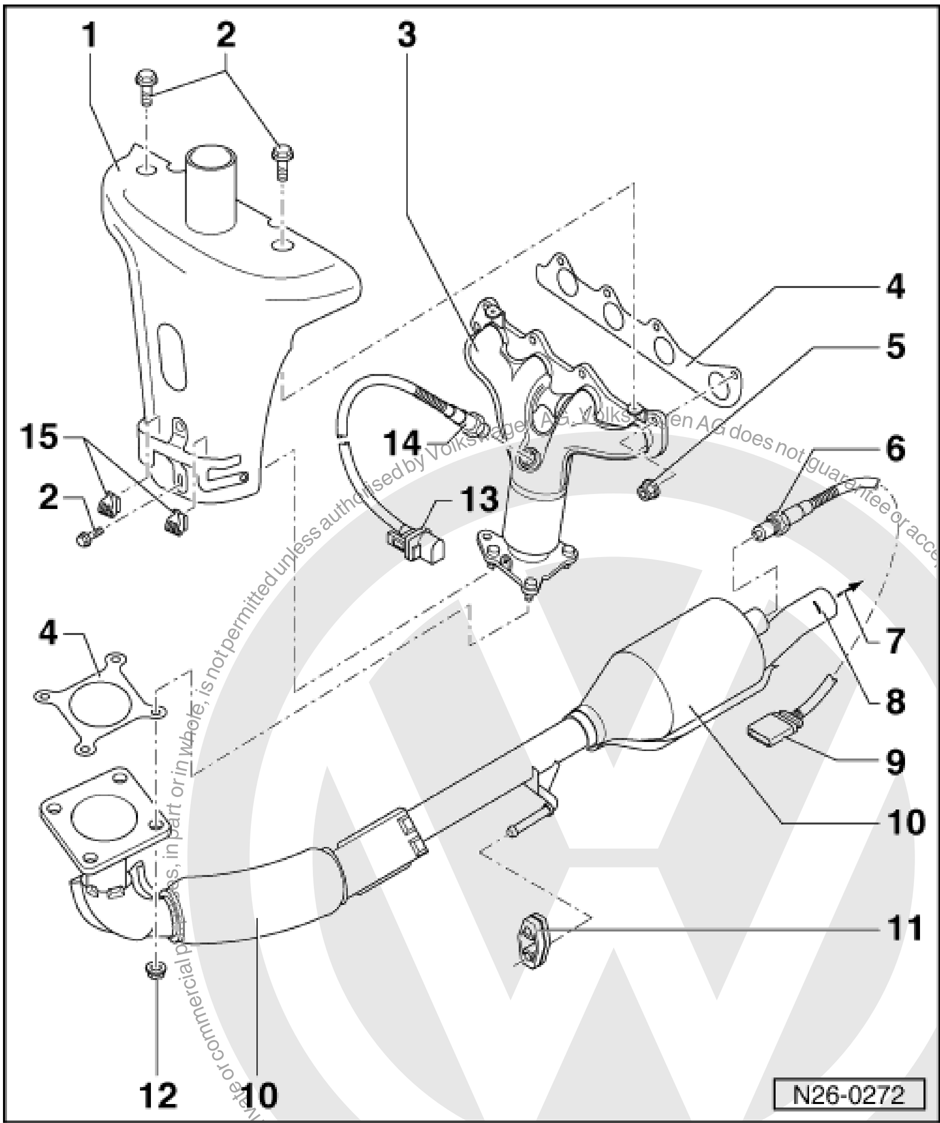

6 Lambda probe 2 after catalyst (G130)*, 50 Nm
- Only engine codes AKP, AUC, AUD
- Checking:

=> Repair group 24; Check functions; Check Lambda probe and Lambda regulation after catalyst Check functions Check Lambda probe and Lambda regulation after catalyst

- Grease only the threads with "G 052 112 A3"; "G 052 112 A3" must not get into the slots on the probe body
- Remove and install with 3337

7 To silencer

8 Marking

9 Connector
- Only engine codes AKP, AUC, AUD
- For Lambda probe 2 after catalyst (G130) and Lambda probe heating (Z29)
- Black, 4-pin

Protected by copyright. Copying for private or commercial purposes, in part or in whole, is not permitted unless authorised by Volkswagen AG. Volkswagen AG does not guarantee or accept any liability with respect to the correctness of information in this document. Copyright by Volkswagen AG.
satelettronica

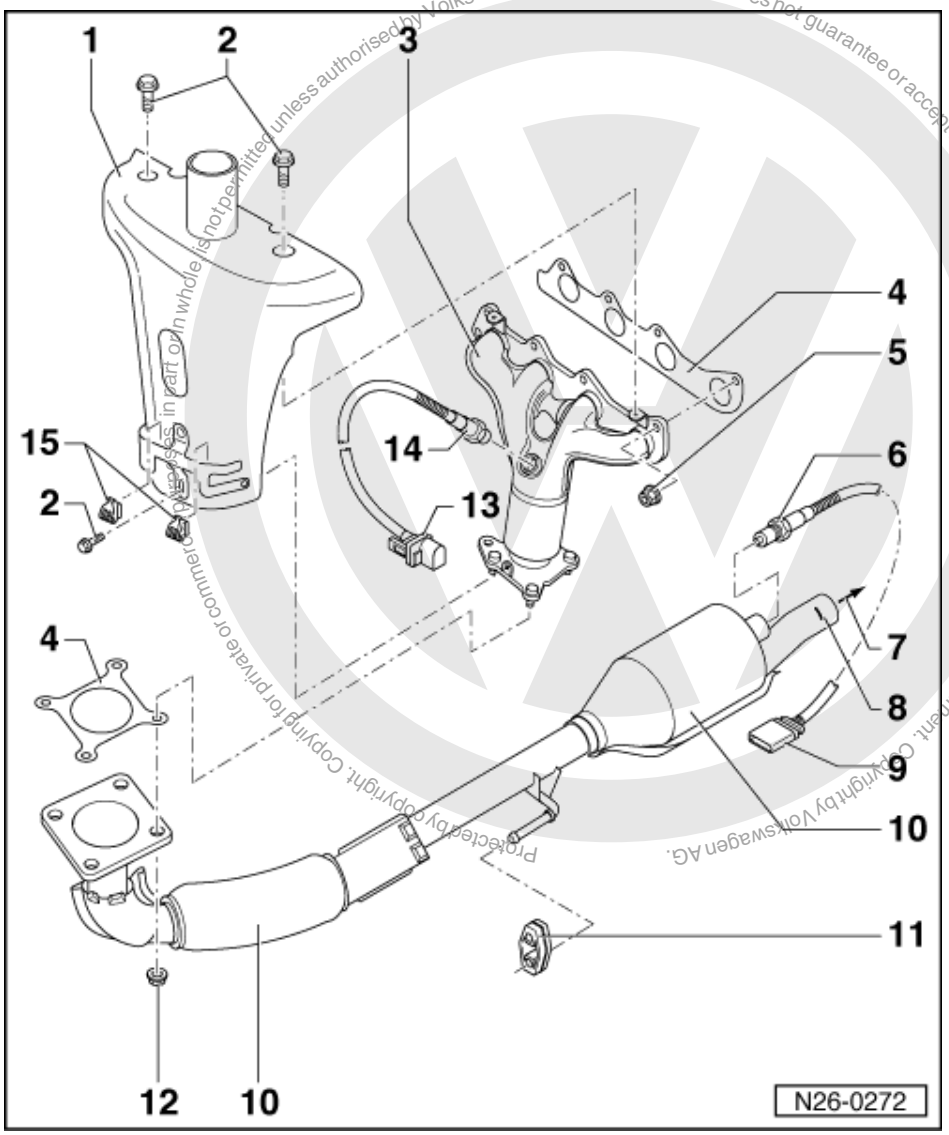

10 Front exhaust pipe with catalyst

- Check catalyst (engine codes AKP, AUC, AUD) => Page 147
- Only engine code AKK with ECE standard: uncoated catalyst

11 Mounting

- Renew if damaged

12 Locating nut, 40 Nm

13 Connector

- For Lambda probe 1 before catalyst (G39) and Lambda probe heating (Z19)
  Engine codes AKK, ALD:
- Black,4-pin
  Engine codes AKP, AUC, AUD:
- Black, 6-pin

satelettronica

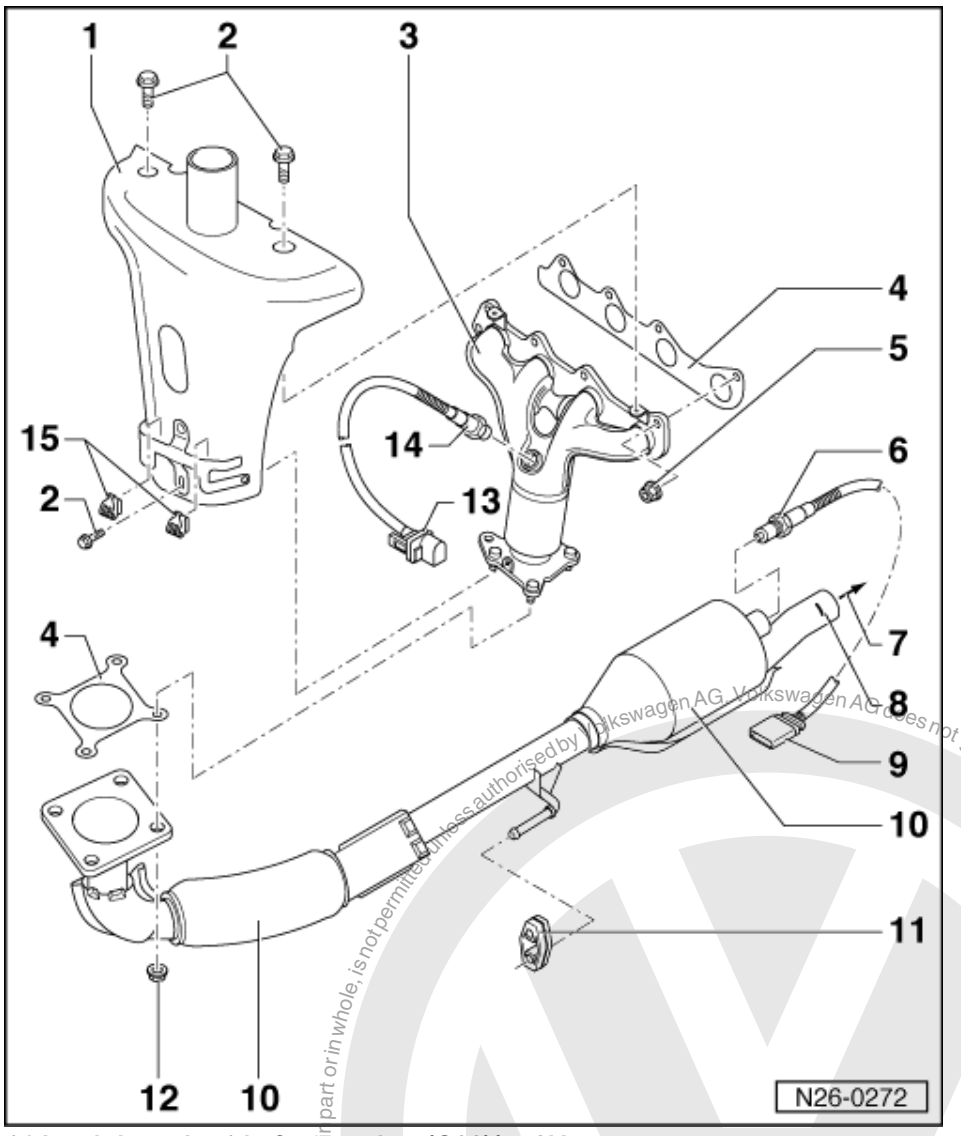

14 Lambda probe 1 before catalyst (G39)*, 50Nm

- Checking:

=> Repair group 24; Check functions; Check Lambda probe and Lambda regulation before catalyst Check functions Check Lambda probe and Lambda regulation before catalyst

- Grease only the threads with "G 052 112 A3"; "G 052 112 A3" must not get into the slots on the probe body
- Remove and install with 3337
- Check Lambda probe dynamics
  (only engine code AKP, AUC, AUD) => Page 147 , Checking catalyst
- Only engine code AKK with ECE standard: lead resistant Lambda probe

15 Bracket

- For electric wiring of Lambda probe 1 before catalyst

Note:

Tighten warm air collector plate in sequence as illustrated to ensure it is installed free of stress.

Protected by copyright. Copyright by Volkswagen AG. Copying for private or commercial purposes, in part or in whole, is not permitted unless authorised by Volkswagen AG. Volkswagen AG does not guarantee or accept any liability with respect to the correctness of information in this document.
satelettronica

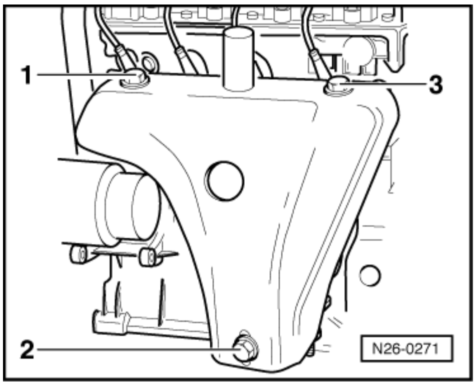

-> Fig. 1 Tightening sequence, warm air collector plate on exhaust manifold.

1.3 - Silencer with mountings

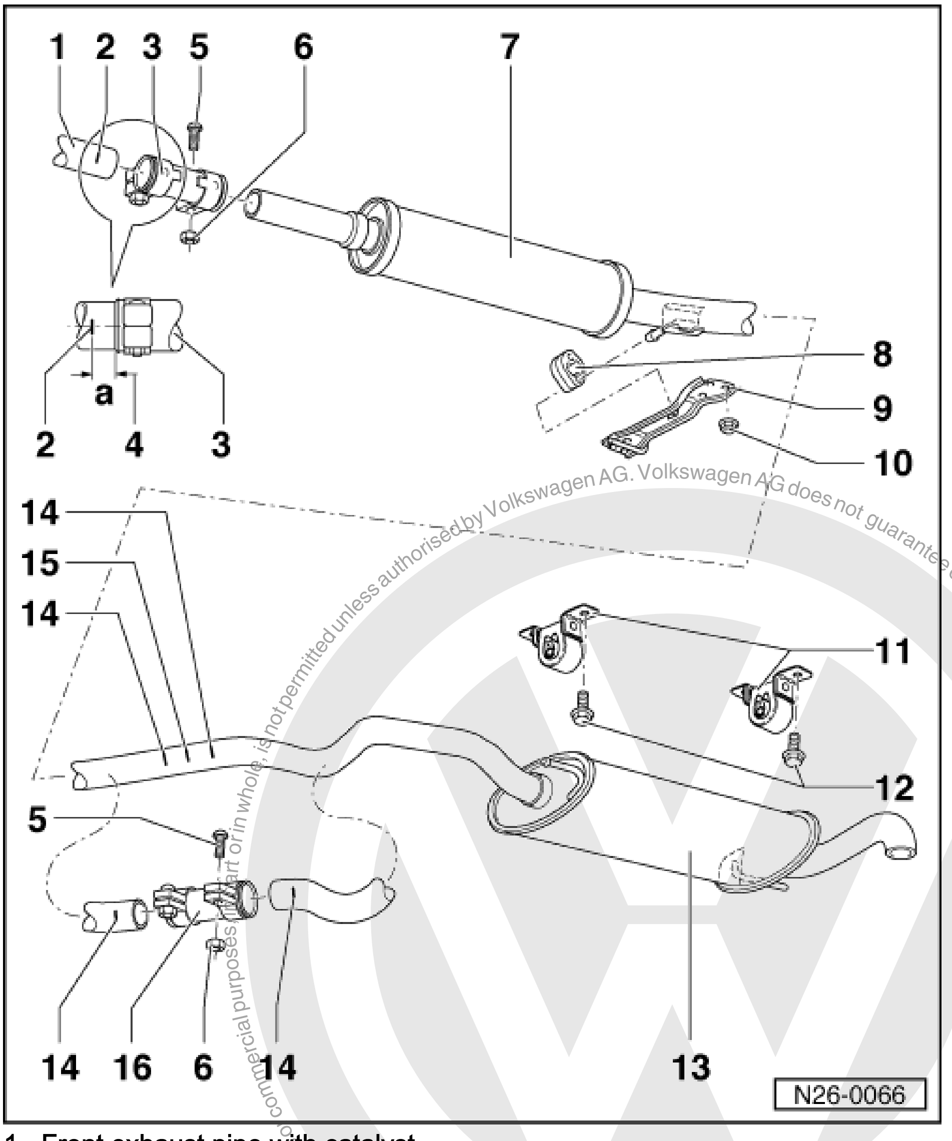

1 Front exhaust pipe with catalyst

2 Marking

- Three times on circumference

Protected by copyright. Copying for private or commercial purposes, in part or in whole, is not permitted unless authorised by Volkswagen AG. Volkswagen AG does not guarantee or accept any liability with respect to the correctness of information in this document. Copyright by Volkswagen AG.

satelettronica

3 Double clamp
4 Dimension-a- = ca. 5 mm
5 Mushroom head screw
6 23 Nm
7 Front silencer1)
- Insert in double clamp to marking

8 Mounting
- Renew if damaged

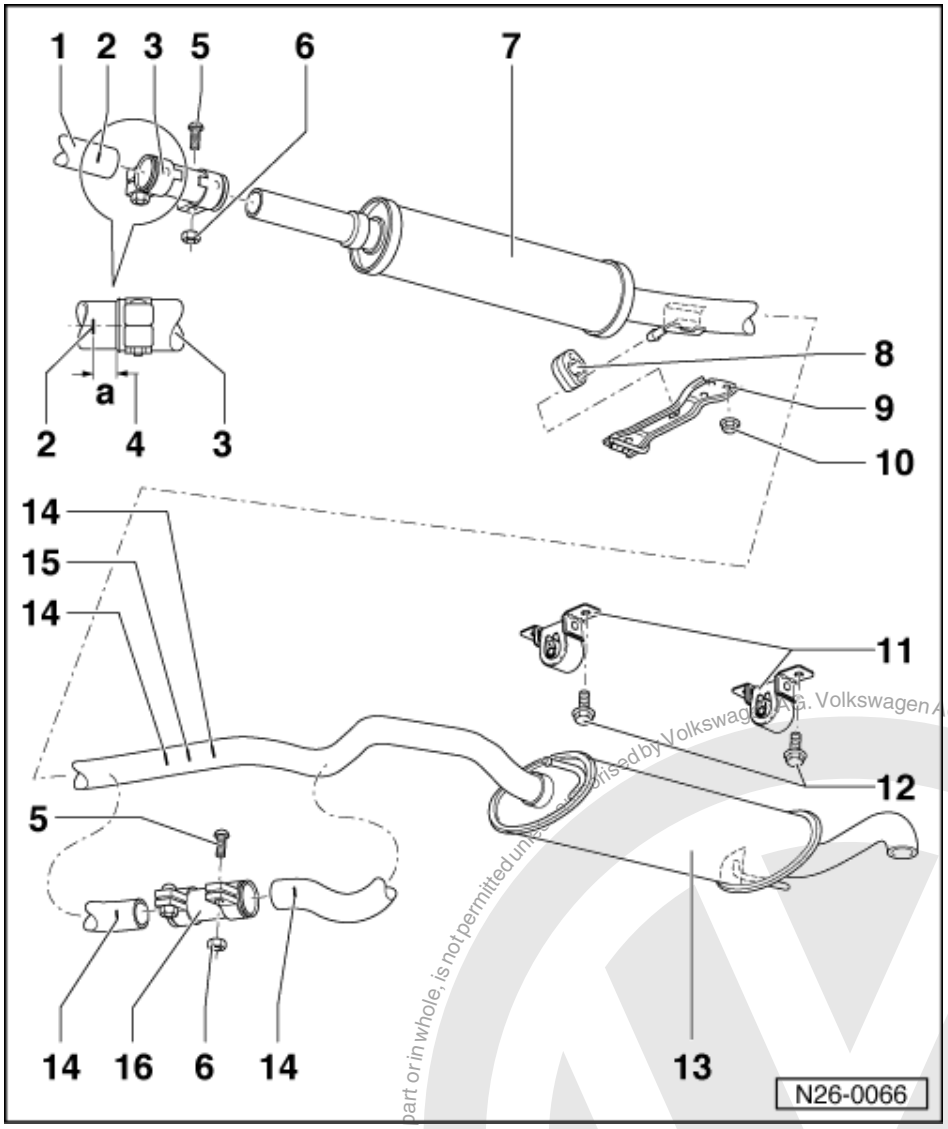

9 Connecting piece
10 15 Nm
11 Mounting
- Renew if damaged

12 20 Nm + 1/4 turn (90 °) further
13 Rear silencer1)
14 Marking
- Visible from below
- For repair double clamp -item 16 -

15 Separating point
- For repair cases1)

satelettronica
Protected by copyright. Copying for private or commercial purposes, in part or in whole, is not permitted unless authorised by Volkswagen AG. Volkswagen AG does not guarantee or accept any liability with respect to the correctness of information in this document. Copyright by Volkswagen AG.

- Marked by impressions on connecting pipe

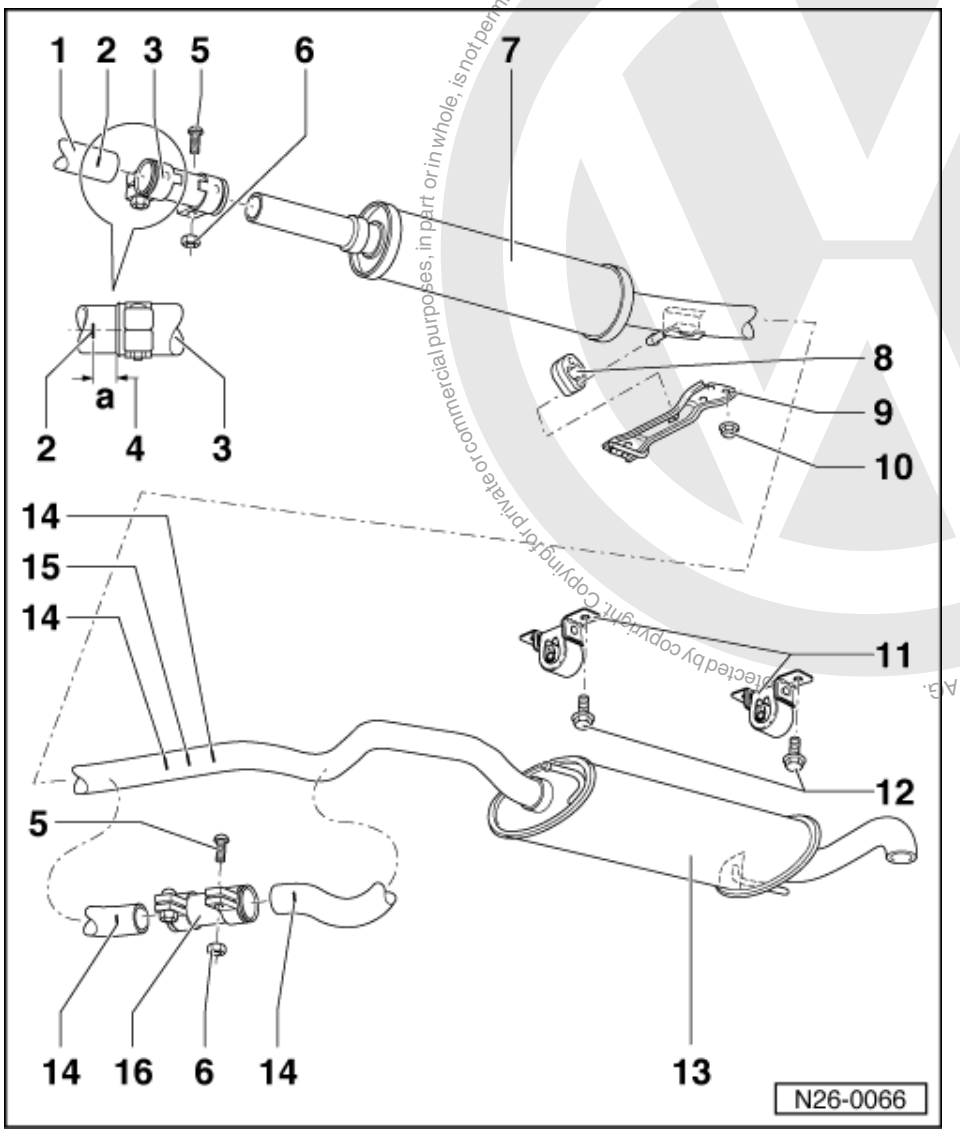

16 Repair double clamp

- Must be slid onto the markings - 14 -

1) Front and rear silencers are installed as a single component as standard. In repair cases the front and rear silencers are supplied individually and a repair double clamp item 16 is supplied as a joint. Cut through connecting pipe at separating point - 15 - with a body saw e.g. V.A.G 1523.

1.4 - Checking catalyst

Only engine codes AKP, AUC, AUD

Special tools, workshop equipment, testers, measuring instruments and auxiliary items required

- Fault reader V.A.G 1551 or vehicle system tester V.A.G 1552 with cable V.A.G 1551/3A

Protected by copyright. Copying for private or commercial purposes, in part or in whole, is not permitted unless authorised by Volkswagen AG. Volkswagen AG does not guarantee or accept any liability with respect to the correctness of information in this document. Copyright by Volkswagen AG.
satelettronica

Protected by copyright. Copyright by Volkswagen AG. Volkswagen AG does not guarantee or accept any liability with respect to the correctness of information. Copyright by Volkswagen AG. Protected by copyright. Copyright by Volkswagen AG. Volkswagen AG does not guarantee or accept any liability with respect to the correctness of information. Copyright by Volkswagen AG. Protected by copyright. Copyright by Volkswagen AG. Volkswagen AG does not guarantee or accept any liability with respect to the correctness of information. Copyright by Volkswagen AG. Protected by copyright. Copyright by Volkswagen AG. Volkswagen AG does not guarantee or accept any liability with respect to the correctness of information. Copyright by Volkswagen AG. Protected by copyright. Copyright by Volkswagen AG. Volkswagen AG does not guarantee or accept any liability with respect to the correctness of information. Copyright by Volkswagen AG. Protected by copyright. Copyright by Volkswagen AG. Volkswagen AG does not guarantee or accept any liability with respect to the correctness of information. Copyright by Volkswagen AG. Protected by copyright. Copyright by Volkswagen AG. Volkswagen AG does not guarantee or accept any liability with respect to the correctness of information. Copyright by Volkswagen AG.

Test conditions

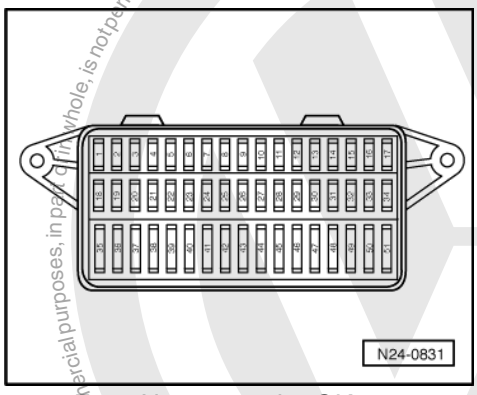

- -> Fuse No. 1 must be OK.
- Vehicle stationary
- All electrical consumers, e.g. lights and rear window heating must be switched off.
- If the vehicle is equipped with an air conditioning system, this must be switched off.
- Exhaust system between catalyst and cylinder head must be free of leaks
- Coolant temperature must be at least 80 °C, =>display group 04, display zone 3.
- Intake air temperature less than 60°C
  =>display group 04, display zone 4

Functional check

- Connect fault reader V.A.G 1551 (V.A.G 1552). Start engine and select the engine control unit with the "Address word" 01. Connecting fault reader and selecting engine control unit:

=> Repair group 01; General to self-diagnosis; Connecting fault reader V.A.G 1551 and selecting engine control unit General to self-diagnosis Connecting fault reader V.A.G 1551 and selecting engine control unit

Lambda probe dynamics diagnosis

-> Indicated on display:

```
Rapid data transfer     HELP
Select function XX
```

- Press keys 0 and 4 for the "Introduce basic setting" function and confirm entry with Q key.

-> Indicated on display:

```
Basic setting
Input display group number XXX
```

- Press keys 0, 3 and 4 for "Display group number 34" and confirm entry with Q key.

-> Indicated on display:
(1...4 = Display zones)

```
System in basic setting     34
     1     2     3     4
```

- Depress brake pedal.

  The engine speed is increased to
  approx. 1100...1300 rpm
  by the engine control unit

- Allow engine to run at increased engine speed until
  display zone 4 jumps from "Test OFF" to "Test ON". The catalyst temperature in
  display zone 2 must be a minimum of 400 °C.

satelettronica

Note:

This process can take a few minutes.

- Check the amplitude quality in display zone 3:
  Specification: 0.7... 2.00
- Allow engine to continue to run at increased engine speed until
  display zone 4 displays the specification "B1-P1 OK.".

If the display does not indicate as described:

- Interrogate fault memory:

=> Repair group 01; Fault memory; Interrogating and erasing fault memory of engine control unit Fault memory Interrogating and erasing fault memory of engine control unit

If the display indicates as described:

- Press C key.

  The engine speed drops to idling speed.

Catalyst diagnosis

Note:

The diagnosis will only be terminated if the Lambda probe dynamics diagnosis is first successfully completed.

-> Indicated on display:

```
Basic setting
Input display group number XXX
```

- Press keys 0, 4 and 6 for "Display group number 46" and confirm entry with Q key.

-> Indicated on display:
(1...4 = Display zones)

```
System in basic setting     46
    1     2     3     4
```

- Depress brake pedal.

  The engine speed is increased to
  approx. 1100...1300 rpm
  by the engine control unit

- Allow engine to run at increased engine speed until
  display zone 4 jumps from "Test OFF" to "Test ON". The catalyst temperature in
  display zone 2 must be a minimum of 400 °C.

- Check the amplitude ratio in display zone 3:
  Specification: max. 0.50
- Allow the engine to continue to run at increased engine speed until
  display zone 4 displays "Cat B1 OK."

If the display does not indicate as described:

- Interrogate fault memory:

=> Repair group 01; Fault memory; Interrogating and erasing fault memory of engine control unit Fault memory Interrogating and erasing fault memory of engine control unit

If the display indicates as described:

Copyright by Volkswagen AG. Volkswagen AG does not guarantee or accept any liability with respect to the correctness of information in this document. Copyright by Volkswagen AG. Reproduced by courtesy of Volkswagen AG. Not for commercial purposes, in part or whole, is not permitted unless authorised by Volkswagen AG.
satelettronica

- Press ⇒key.

  The engine speed drops to idling speed.

- Press keys 0 and 6 for the function "End output" and confirm entry with the Q key.
- Switch off ignition.

2 - Exhaust gas recirculation system

2.1 - Exhaust gas recirculation system

Notes:

- The function/control of the exhaust gas recirculation system is checked by the self-diagnosis of the Motronic control unit (J220).
- Pulsed control makes every conceivable valve position possible.
- Checking exhaust gas recirculation valve (N18).

=> Repair group 01; Final control diagnosis; Performing final control diagnosis Final control diagnosis Performing final control diagnosis

- The cone shaped plunger in the (electric) EGR valve ensures that various cross sectional openings are possible at different plunger lifts.
- Components marked with an * are checked via the self-diagnosis.

=> Repair group 01; Fault memory; Interrogating and erasing fault memory of engine control unit Fault memory Interrogating and erasing fault memory of engine control unit

- Components marked with ** are checked via the final control diagnosis.

=> Repair group 01; Final control diagnosis; Performing final control diagnosis Final control diagnosis Performing final control diagnosis

Protected by copyright. Copying for private or commercial purposes, in part or in whole, is not permitted unless authorised by Volkswagen AG. Volkswagen AG does not guarantee or accept any liability with respect to the correctness of information in this document. Copyright by Volkswagen AG.
satelettronica

2.2 - Servicing parts of exhaust gas recirculation system

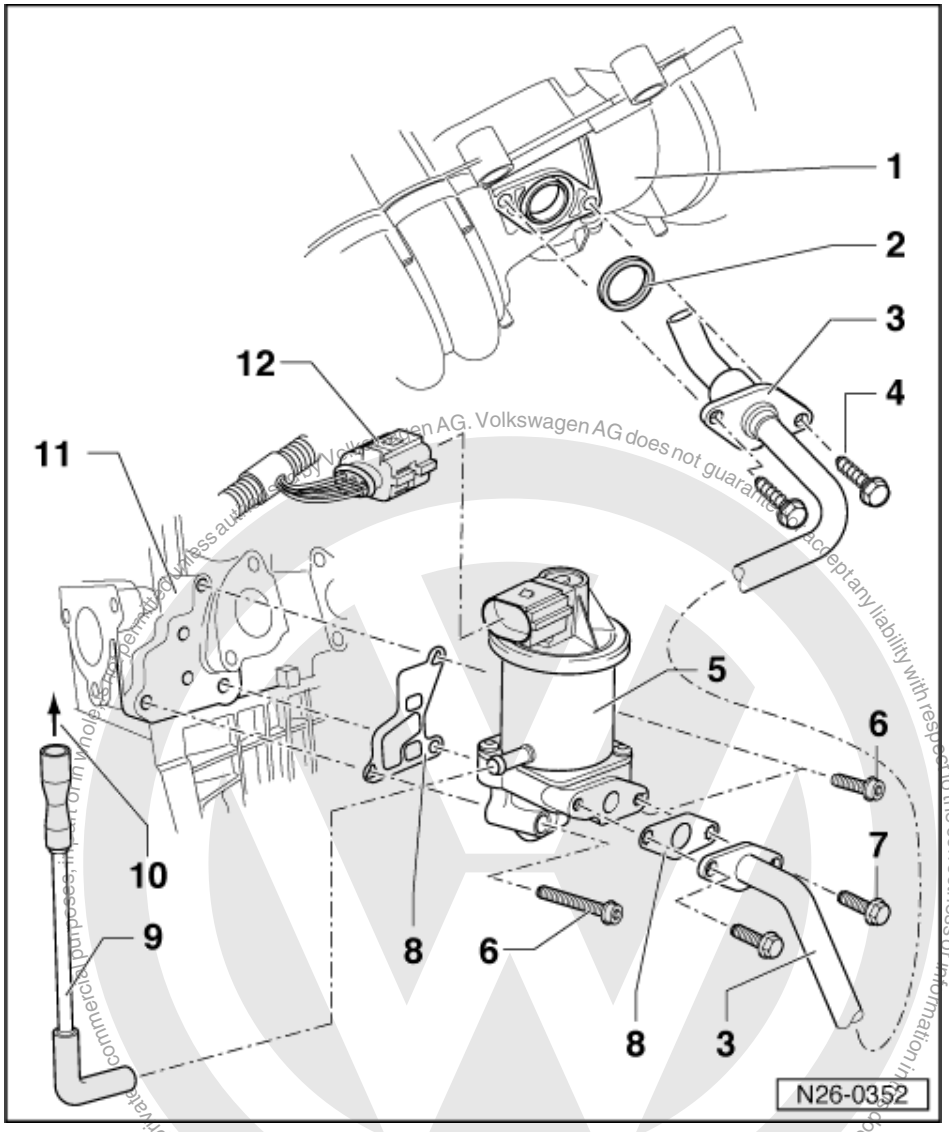

Only engine code AUC

1 Intake manifold
2 Oil seal
- Renew if damaged

3 Connecting pipe
4 Self-tapping bolt, 8 Nm
- max. rotational speed if using power tools: 350 rpm

5 EGR valve (N18)*/** with potentiometer for exhaust gas recirculation (G212)*
- Check EGR valve (N18):

=> Repair group 01; Final control diagnosis; Performing final control diagnosis Final control diagnosis Performing final control diagnosis

- Check potentiometer for exhaust gas recirculation (G212) =>Page 153

satelettronica

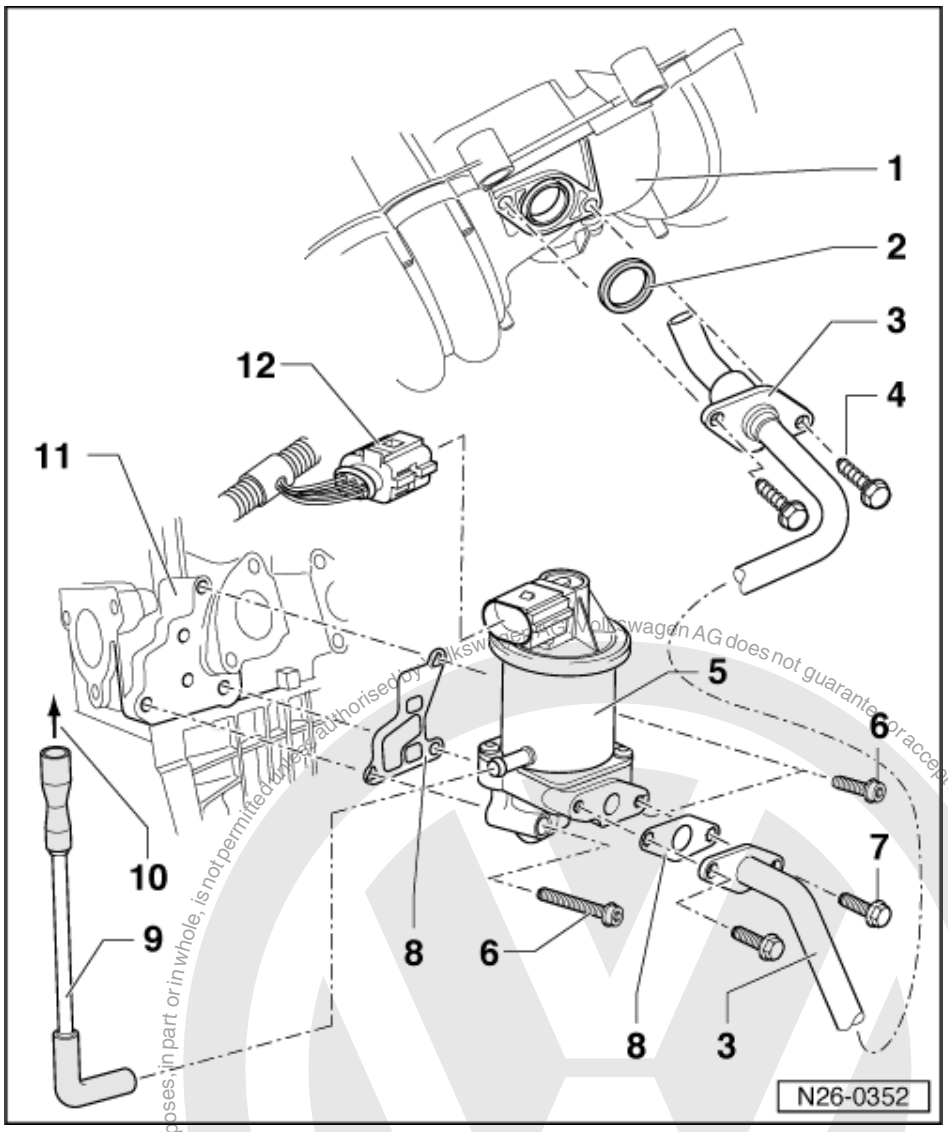

6 10 Nm
7 8 Nm
8 Gasket
- Renew

9 Breather pipe
10 Connection to intake manifold
11 Cylinder head
12 6-pin connector

Protected by copyright. Copying for private or commercial purposes, in part or in whole, is not permitted unless authorised by Volkswagen AG. Volkswagen AG does not guarantee or accept any liability with respect to the correctness of information in this document. Copyright by Volkswagen AG.
satelettronica

2.3 - Checking potentiometer for exhaust gas recirculation (G212)

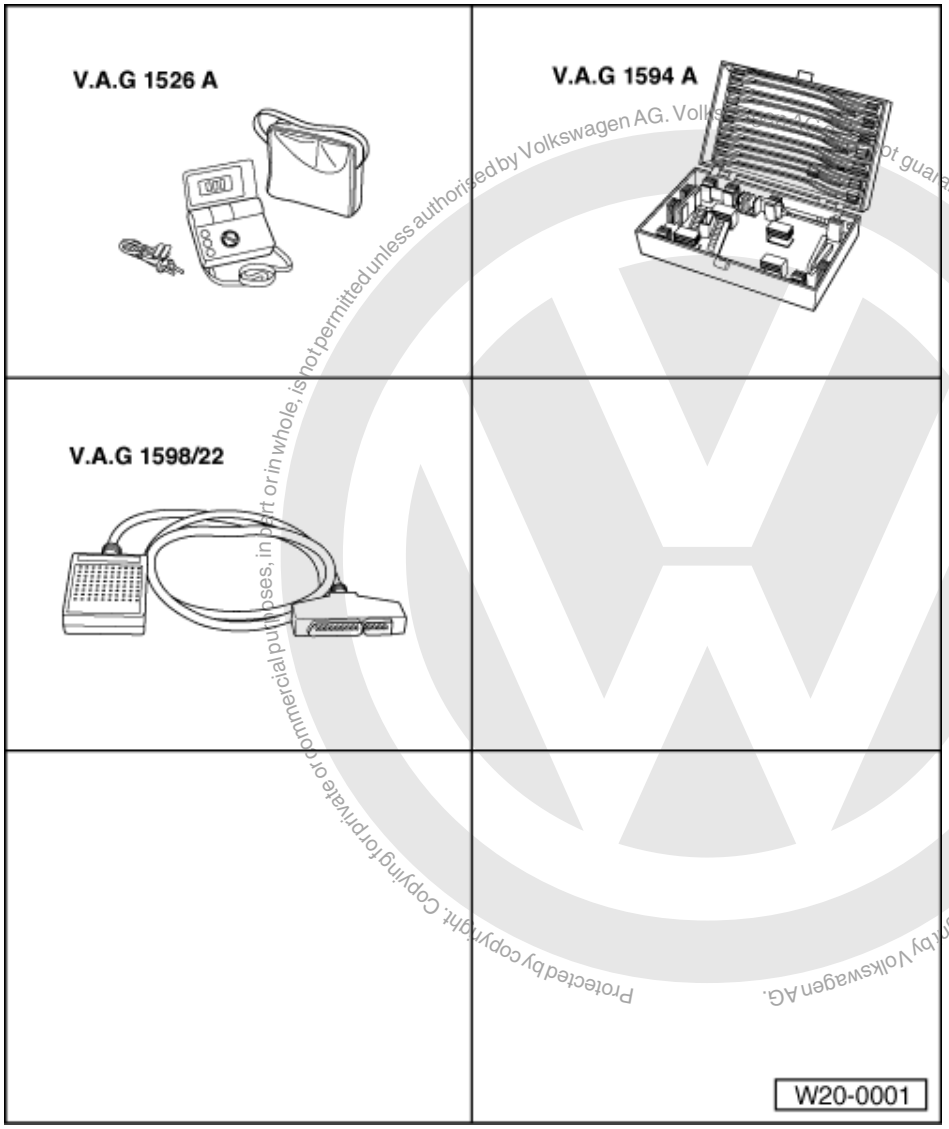

Protected by copyright. Copying for private or commercial purposes, in part or in whole, is not permitted unless authorised by Volkswagen AG. Volkswagen AG does not guarantee or accept any liability with respect to the correctness of information in this document. Copyright by Volkswagen AG.

satelettronica

Only engine code AUC

Special tools, workshop equipment, test and measuring appliances and auxiliary items required

- V.A.G 1526 Hand multimeter
- V.A.G 1594 A Adapter set
- V.A.G 1598/22 Test box
- Current flow diagram

Test conditions

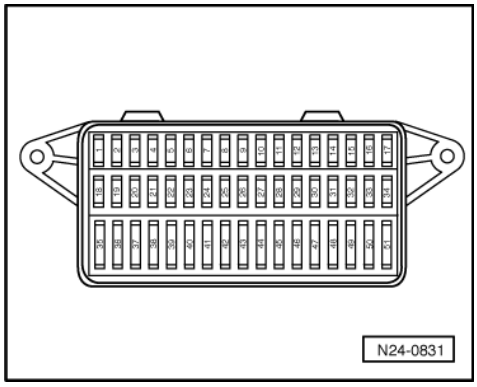

- -> Fuses 30, 31 and 36 must be OK.

Test sequence

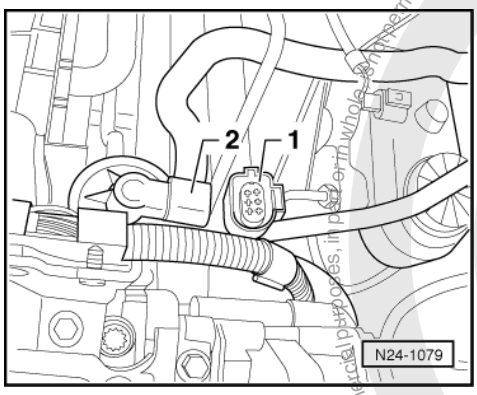

- -> Pull off 6-pin connector -1- (grey) from EGR valve.

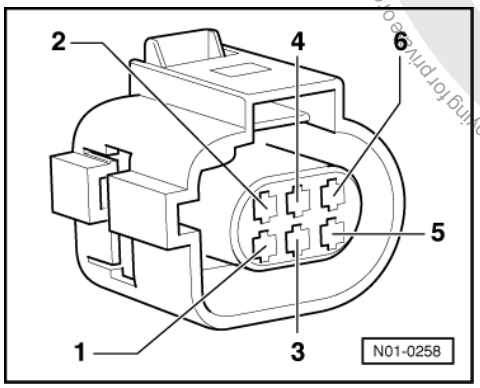

- -> Connect multimeter to contacts 2 and 4 of 6-pin connector for voltage measurement.
- Switch on ignition.
  Specification: min. 4.5 V

- Switch off ignition.

Protected by copyright. Copying for private or commercial purposes, in part or in whole, is not permitted unless authorised by Volkswagen AG. Volkswagen AG does not guarantee or accept any liability with respect to the correctness of information in this document. Copyright by Volkswagen AG.
satelettronica

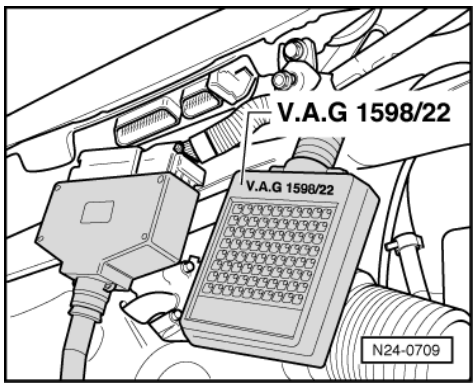

- -> Connect test box V.A.G 1598/22 to control unit wiring harness.

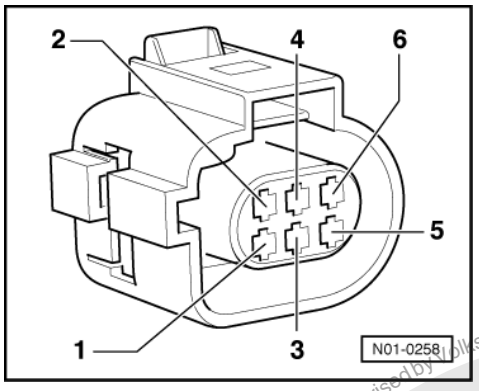

- -> Check wiring for open circuit between test box and 6-pin connector using current flow diagram.
  Contact 2 and test box socket 62
  Contact 4 and test box socket 54
  Contact 6 and test box socket 69
  Wire resistance: max. 1.5 ω
- Additionally check wiring for short to one another, and for short to positive or earth.
- Depending on conditions, renew following components:

Voltage supply and wiring OK:

- Renew EGR valve (N18) with potentiometer (G212).
- Erase learnt values and re-adapt engine control unit

=> Repair group 24; Engine control unit; Adapting engine control unit to throttle valve control part Engine control unit Adapting engine control unit to throttle valve control part

If no wiring fault is detected and voltage supply is not OK:

- Renew engine control unit.

=> Repair group 24; Engine control unit; Renewing engine control unit Engine control unit Renewing engine control unit

satelettronica
Protected by copyright. Copying for private or commercial purposes, in part or whole, is not permitted unless authorised by Volkswagen AG. Volkswagen AG does not guarantee or accept any liability with respect to the correctness of information in this document. Copyright by Volkswagen AG.